Chapter T TRANSMISSION - PART 2

TURBOHYDRAMATIC 400
TORQUE CONVERTER TRANSMISSION

SECTION		PAGE
T1	Introduction	T145
T2	Servicing	T163
T3	Testing	T167
T4	Fault Diagnosis	T169
T5	Control Linkage	T183
T6	Removal of Units	T191
T7	Gearchange Actuator, Neutral and Height Control Switches	T195
T8	Remote Gearchange Selector	T273
T9	Transmission - To Remove and Fit	T221
T10	Torque Converter	T 227
T11	Vacuum Modulator and Valve	T231
T12	Governor Assmb!y	T235
T13	Speedometer Drive	T239
T14	Sump, Strainer and Intake Pipe	T241
T15	Control Valve Unit	T243
T16	Rear Servo	T255
T17	Detent Solenoid, Connector, Control Valve Spacer and Front Servo	T259
T18	Rear Extension	T263
T19	Oil Pump	T265
T20	Control Rods, Levers and Parking Linkage	T273
T21	Turbine Shaft, Forward and Direct Clutches, Sun Gear Shaft and Front Band	T277
T22	Intermediate Clutch, Gear Unit, Centre Support and Reaction Carrier	T287
T23	Transmission Case	T305
T24	Workshop Tools	T311

FIG. T117 THE TORQUE CONVERTER
TRANSMISSION AND GEARCHANGE ACTUATOR—
CUT-AWAY VIEW

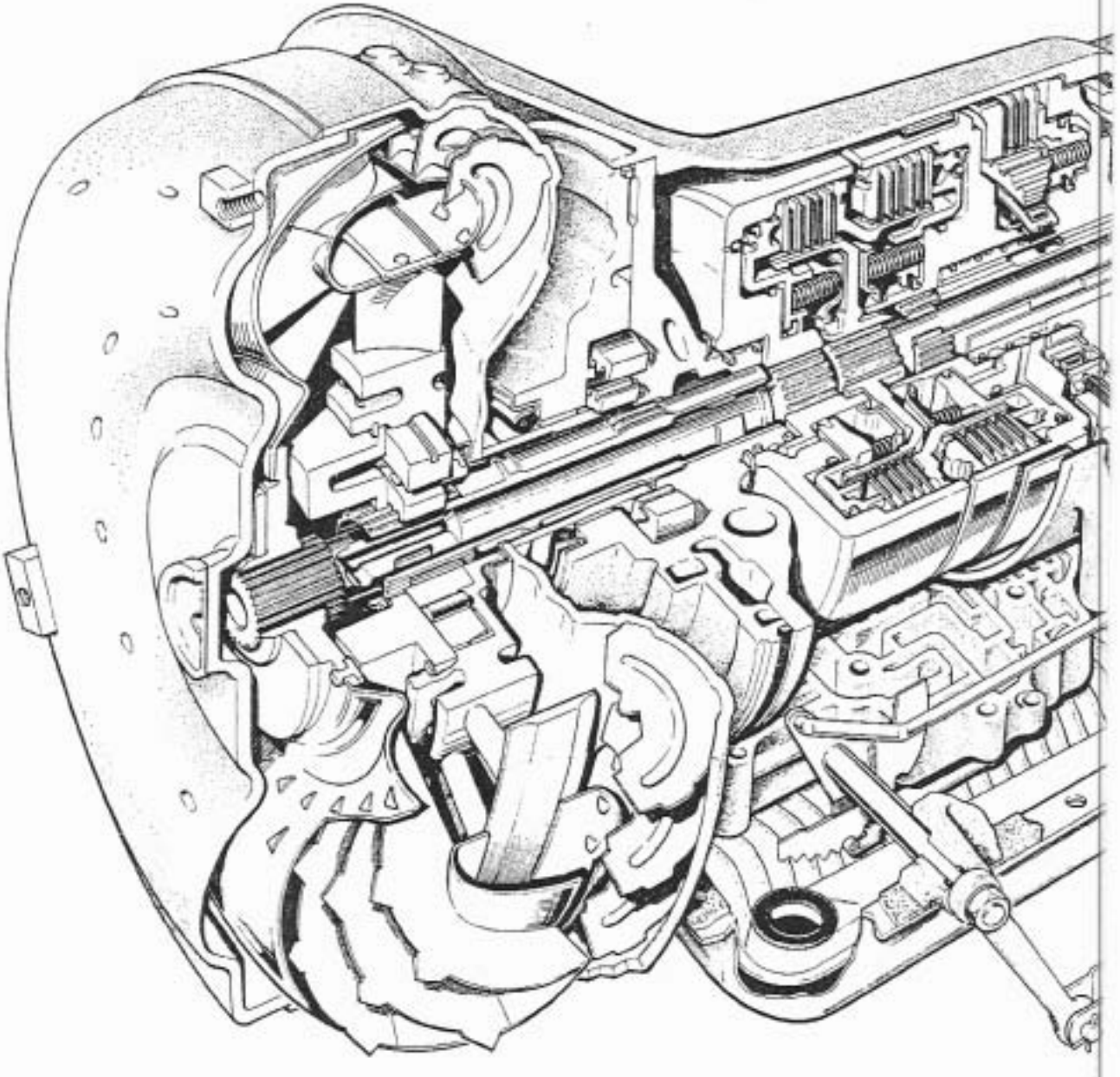

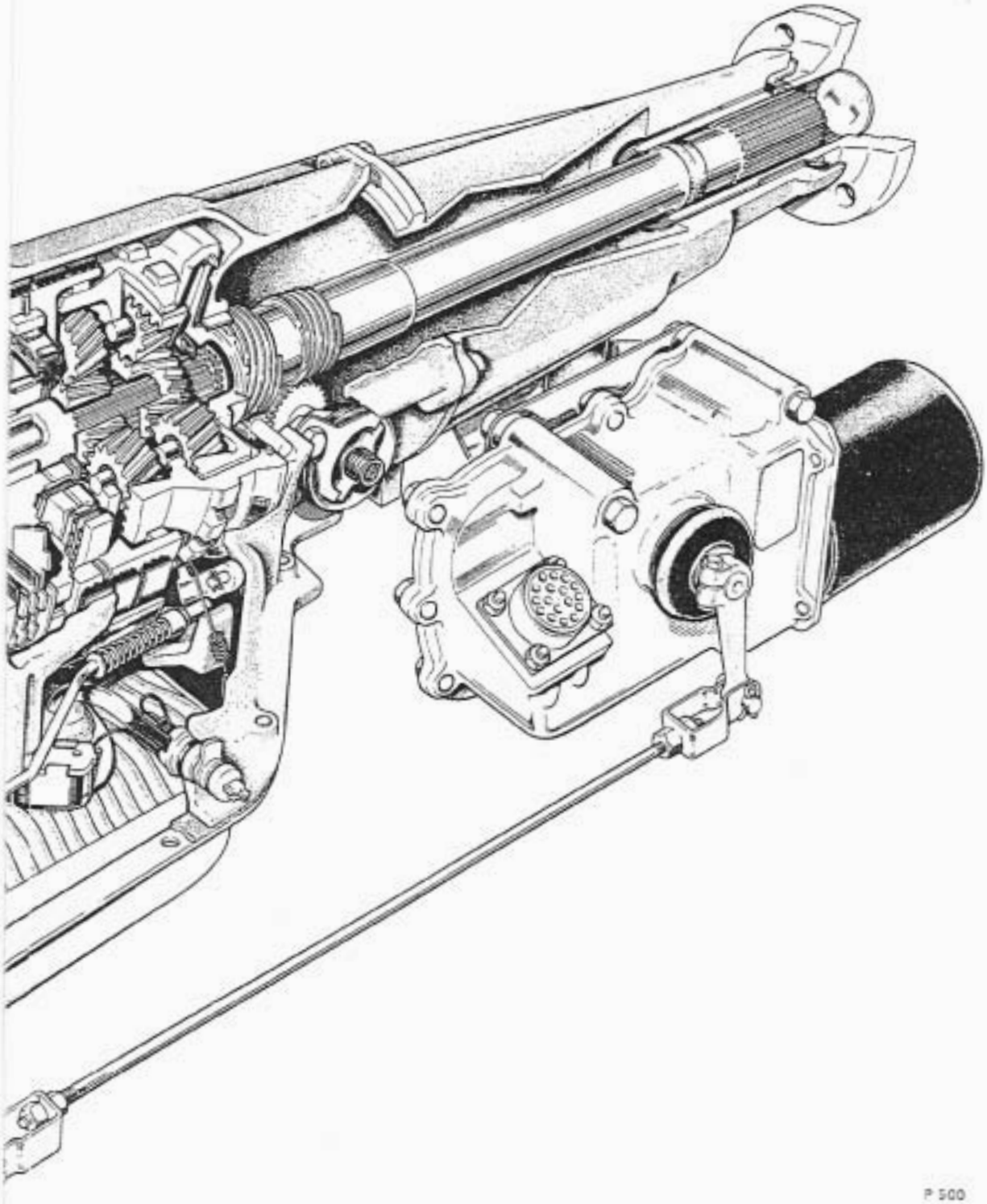

P 500

FIG. T117 THE TORQUE CONVERTER TRANSMISSION AND GEARCHANGE ACTUATOR— CUT-AWAY VIEW

Printed in Great Britain

September 1971

T.S.D. 2476

Chapter T
TRANSMISSION — PART 2

Section T1
INTRODUCTION

All left-hand drive Rolls-Royce Silver Shadow and Bentley T series motor cars are fitted with the Torque Converter Transmission.

Late right-hand drive Rolls-Royce Silver Shadow and Bentley T series motor cars are fitted with the Torque Converter Transmission as follows:

Car Serial Number SRH 4033 and onwards produced for export.

All right-hand drive from Car Serial Number SBH 4478 and SRH 4487 (except SRH 4488).

The Torque Converter Transmission (*see Fig. T117*) is a fully automatic unit, consisting primarily of a three-element hydraulic torque converter and a compound planetary gear train. On current cars three multiple-disc clutches, a sprag unit, two roller clutch units and two friction bands provide the elements which are required to obtain the desired functions of the gear train.

Note On **early** cars the gear train consists of two sprag units and on **intermediate** cars a sprag unit and roller clutch unit, in place of the **current** two roller clutch units.

The Torque Converter Transmission can be identified by a name plate, fitted to the right-hand side of the transmission, toward the centre of the case. The serial number is prefixed by the letters RR and the year in numerals.

Note On cars produced after 1972, destined for countries where full emission control systems are required (i.e. U.S.A., Canada and Japan), the transmission prefix letters are changed from RR to RS. The reason for this change in the prefix lettering is that a different transmission modulator is fitted.

The torque converter, clutches and rollers connect the engine to the planetary gears with the aid of pressurised transmission fluid. Three forward gears and Reverse are provided. When necessary, the torque converter will supplement the gears by multiplying engine torque.

The torque converter is of welded steel construction and cannot be dismantled. The unit is made up of two vaned sections which face each other across a fluid filled housing. The pump half of the converter is connected to the engine and the turbine half is connected to the transmission.

When the engine is running the converter pump rotates and throws fluid against the turbine, causing the turbine to rotate. The fluid then returns to the pump in a circular flow and continues this cycle as long as the engine is running.

The converter also has a smaller vaned section, called a stator, which directs the fluid back to the pump through smaller openings at greater speed. The speeded-up fluid imparts additional force to the engine driven converter pump, thus multiplying engine torque.

A hydraulic system pressurised by an internal-external gear type of pump provides the working pressure required to operate the friction elements and automatic controls.

The external control connections to the transmission are:

An electric gearchange actuator and a system of rods and levers. The actuator responds to an electrical signal from a switch on the steering column, then moves the gearchange lever on the transmission to the required position.

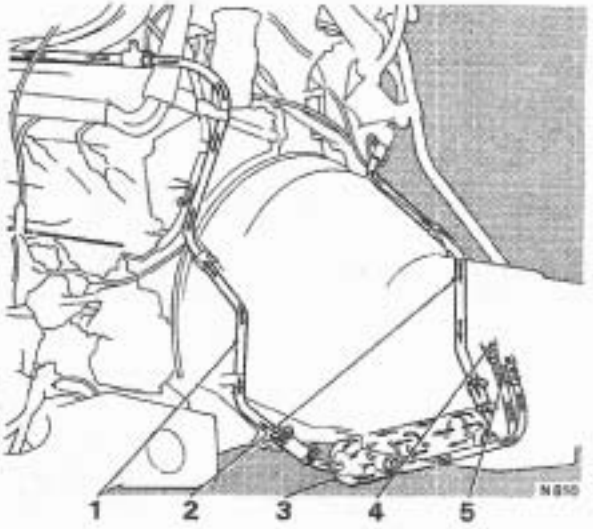

FIG. T118 HEAT EXCHANGER SYSTEM (EARLY CARS)

1 Coolant from heat exchanger to coolant pump
2 Coolant from cylinder head to heat exchanger
3 Heat exchanger
4 Transmission fluid to heat exchanger
5 Transmission fluid from heat exchanger

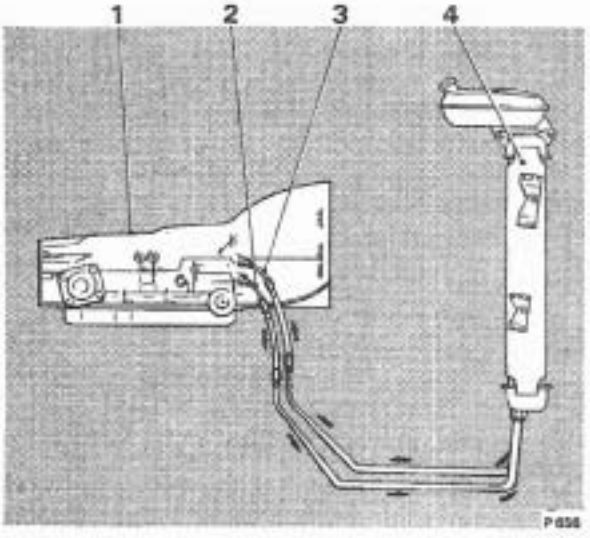

FIG. T119 HEAT EXCHANGER SYSTEM (LATER CARS)

1 Transmission
2 Transmission fluid to heat exchanger
3 Transmission from heat exchanger
4 Coolant radiator with heat exchanger in bottom tank

Engine vacuum — to operate a vacuum modulator unit.

12 volt electrical signals — to operate electrical detent solenoid.

Gear or torque ratios of the transmission are as follows:

First	—	2·5 : 1 gear ratio
Second	—	1·5 : 1 gear ratio
Third	—	1·0 : 1 gear ratio
Reverse	—	2·0 : 1 gear ratio

Each gear ratio can be multiplied by as much as two, depending upon the slip speed of the converter pump and turbine.

A vacuum modulator is used to automatically sense engine torque input to the transmission. The vacuum modulator transmits this signal to the pressure regulator which controls main line pressure, so that all the torque requirements of the transmission are met and the correct gearchange spacing is obtained at all throttle openings.

Early cars the detent solenoid is activated by a micro-switch adjacent to the carburetters. When the engine throttle is opened sufficiently a micro-switch is closed by the throttle controls, the solenoid in the transmission is activated and a down-change will occur at speeds below 70 m.p.h. (113 k.p.h.). At lower speeds a down-change will occur at smaller throttle openings without the aid of the micro-switch or the solenoid.

Current cars do not have the micro-switch situated adjacent to the carburetters, instead a micro-switch and plunger assembly are fitted to the toe board beneath the accelerator pedal. Service instructions for this later assembly are given in Chapter U — Part 2.

On **early cars** a transmission fluid heat exchanger is situated beneath the bell housing bottom cover, at the front of the transmission sump (*see Fig. T118*). The transmission is cooled by directing fluid from the converter to the heat exchanger, the cooled fluid then returns to the transmission to feed the lubricating system.

Engine coolant is directed to and from the heat exchanger by connections either at the rear of 'A' bank cylinder head and the radiator bottom tank (**early cars**) or on the inlet side of the coolant pump and the outlet side of the thermostat elbow (**intermediate cars**).

The fluid system incorporates an intake pipe and strainer assembly. An internal by-pass permits increased flow during cold operation when the oil is heavier.

On **current cars** the heat exchanger for the transmission fluid is situated in the bottom of the radiator matrix.

The transmission quadrant has six selector positions which enable the driver to control the operation of the

Printed in Great Britain
September 1971
T.S.D. 2476

transmission under varying driving conditions. The six selector positions appear on the quadrant in the following sequence, from left to right; 'P' – Park, 'R' – Reverse, 'N' – Neutral, 'D' – Drive, 'I' – Intermediate and 'L' – Low. The engine can be started in the Park and Neutral positions only.

'P' – Park position positively locks the output shaft to the transmission case by means of a locking pawl and prevents the car from rolling either backward or forward when parked on a steep incline.

'R' – Reverse enables the car to operate in a reverse direction.

'N' – Neutral enables the engine to be started and run without the car moving.

'D' – Drive is used for all normal driving conditions and maximum economy. Drive range has three gear ratios from starting to direct drive. Forced down-changes are available for safe and rapid overtaking, by fully depressing the accelerator pedal.

'I' – Intermediate adds new performance for congested traffic conditions or hilly terrain. This range has the same starting ratio as 'D', but prevents the transmission from changing above second gear; acceleration is retained when extra performance is required.

The engine can be used to assist braking in this Range.

'L' – Low range permits operation at a lower gear ratio and should be used when maximum torque multiplication is required or, when descending a steep gradient. When the selector lever is moved from Drive to Low at normal road speeds, the transmission will change to second gear and remain in second gear until the speed of the car is reduced to the normal 2–1 down-change speed. The transmission will then change down to first gear and remain in first gear regardless of car speed or engine revolutions, until the selector lever is moved into either the Drive or the Intermediate position.

HYDRAULIC SYSTEM

Pressure control

The transmission is controlled automatically by a hydraulic system (*see Fig. T120*). Hydraulic pressure is supplied by the transmission oil pump, which is engine driven.

Main line oil pressure is controlled by a pressure regulator valve train which is located in the pump and by the vacuum modulator which is connected to engine vacuum.

The pressure regulator controls main line oil pressure automatically, in response to a pressure signal from a modulator valve, in such a manner, that the torque requirements of the transmission clutches are met and correct gearchange spacing is obtained at all throttle openings.

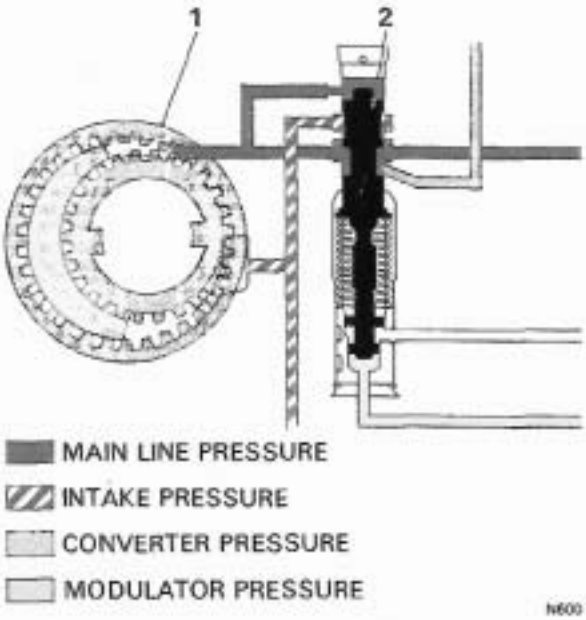

FIG. T120 PRESSURE CONTROL

1 Transmission oil pump
2 Pressure regulator valve train

To control line pressure, a modulator pressure is used. This pressure varies in the same manner as torque input to the transmission. Since the torque input to the clutches is the product of engine torque and converter ratio, modulator pressure must compensate for changes in either or both of these.

To meet these requirements, modulator pressure is regulated by engine vacuum, which is an indicator of engine torque and carburetter throttle opening. It will decrease as the car speed increases to compensate for the changing converter torque ratio.

Vacuum modulator assembly

The engine vacuum signal is received by the vacuum modulator (*see Fig. T121*), which comprises an evacuated metal bellows, a diaphragm and two springs. The assembly is so arranged that the bellows and external spring apply a force that acts on the modulator valve so that it increases modulator pressure. Engine vacuum and an internal spring oppose the bellows and external spring to control modulator pressure.

To reduce the effect of altitude on change points, the effective area of the diaphragm is different than that of the bellows. Atmospheric pressure acts on the resulting differential area to reduce modulator pressure.

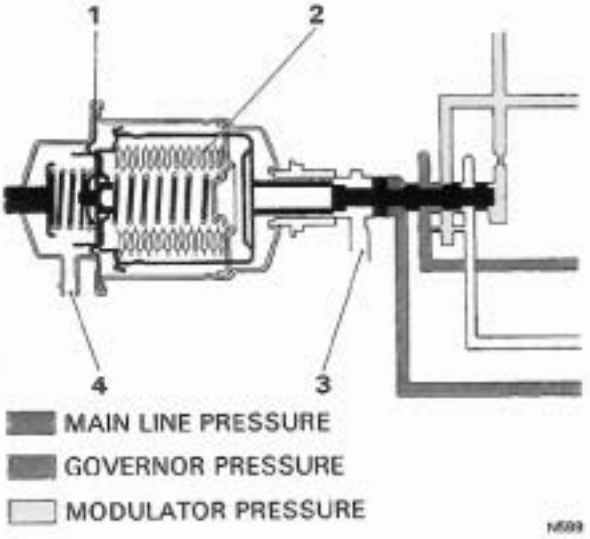

FIG. T121 VACUUM MODULATOR ASSEMBLY

1 Diaphragm
2 Aneroid bellows
3 Exhaust
4 Engine vacuum

Governor assembly

The speed of the car is signalled to the transmission by a governor (*see Fig. T177*) which is driven by the transmission output shaft. The governor is comprised basically of a valve body, a regulator valve and flyweights.

Centrifugal force causes the flyweights to act on the regulator valve. The valve then regulates a pressure signal which increases with road speed.

Governor pressure acts on the modulator valve to cause modulator pressure to decrease as the speed of the car increases.

Operation of valves and hydraulic Control units

Line pressure regulator

The line pressure regulator valve regulates line pressure according to pump speed and engine torque.

Manual valve

The manual valve establishes the range in which the transmission is to operate as selected by the driver through the selector switch and the gear change actuator.

Governor assembly

The governor assembly generates an oil pressure that is sensitive to the speed of the car and which increases as the car speed increases.

Governor pressure is used to control the change points and to regulate modulator pressure.

Vacuum modulator valve

The vacuum modulator valve provides modulator pressure which senses engine torque and car speed. It is used to vary the change points, according to throttle opening, by opposing governor oil on the shift valves and also to raise line pressure proportional to engine torque.

1-2 shift valve

This valve controls the speeds at which the 1–2 and 2–1 changes occur.

1-2 regulator valve

The 1–2 regulator valve regulates modulator pressure to a proportional pressure and tends to hold the 1–2 shift valve in the down-change position.

1-2 detent valve

The 1–2 detent valve senses regulated modulator pressure which tends to hold the 1–2 shift valve in the down-changed position and provides an area for detent pressure for 2–1 detent changes.

2-3 shift valve

This valve controls the speeds at which the 2–3 and 3–2 changes occur.

2-3 modulator valve

The 2–3 modulator valve is sensitive to modulator pressure and applies a variable force on the 2–3 shift valve which tends to hold the 2–3 shift valve in the down-changed position.

3-2 valve

The 3–2 valve prevents modulator pressure from acting on the shift valves after the direct clutch has been applied. This allows fairly heavy throttle operation in third gear without effecting a down-change. In third gear, detent pressure or modulator pressure above 87 lb/sq.in. (6,1 kg/sq.cm.) can be directed to the shift valves to provide the necessary force to effect the down-change.

1-2 accumulator valve

The 1–2 accumulator valve is sensitive to modulator oil and regulates drive oil to a proportionally smaller value. The pressure increases as modulator pressure increases and is used to control the engagement of the intermediate clutch.

Detent valve

The detent valve moves when line oil is exhausted from the end of the valve when the detent solenoid is energised. As a result, detent oil is directed to the 1–2 and 2–3 modulator valves and allows the detent regulator valve to regulate.

Printed in Great Britain

September 1971

T.S.D. 2475

Detent regulator valve

When the detent valve moves, the detent regulator is freed and allows drive oil to enter the detent passage at a regulated pressure of 70 lb/sq.in. (4,9 kg/sq.cm.). Detent oil will also flow into the modulator passages which lead to the shift valves. Low oil moves the detent regulator to accept drive oil, allowing drive oil to enter the modulator and detent passages.

Rear servo and accumulator assembly

The rear servo applies the rear band for engine braking in Low range 1st. gear. It also applies the rear band in Reverse to hold the reaction carrier to provide the reverse gear ratio.

During the 1–2 up-change in Drive and Intermediate ranges the servo acts as an accumulator for the intermediate clutch oil to provide a smooth up-change.

Front servo

The front servo applies the front band to provide engine braking in 2nd. gear in Low and Intermediate ranges. It is used also as an accumulator for direct clutch oil during the application of the direct clutch and in conjunction with a series of check balls which control orifices, is part of the timing for the release of the direct clutch.

To prevent the application of the front band in Neutral, Drive or Reverse ranges, oil is directed from the manual valve to the release side of the servo piston.

In 'D' range, the servo release oil from the manual valve is used to charge the servo in preparation for the application of the direct clutch.

Direct clutch oil is directed to the front servo accumulator piston where spring force, plus direct clutch pressure, stroke the piston up against the force of servo release oil. This lowers the clutch apply pressure for a smooth engagement.

The release of the direct clutch and the exhausting of the front servo accumulator is slowed down by three check balls and three orifices. This permits a smooth return of the drive load to the intermediate roller clutch and also allows the engine r.p.m. to increase during a detent 3–2 down-change in preparation for the lower gear ratio, which results in a smooth change and better acceleration.

The position of the shift valves in each range and gear, and the various oil passages which are used are shown in Figures T122 to T130. The operation of the valves when each gear is selected is described in the following paragraphs.

Drive and Intermediate—First gear

Power flow

Forward clutch – applied. Direct clutch – released. Intermediate clutch–released. Roller clutch–effective. Front band – released. Intermediate roller clutch – ineffective. Rear band – released.

With the selector lever in either Drive or Intermediate range, the forward clutch is applied. This delivers turbine torque to the mainshaft and turns the rear internal gear clockwise. (Converter torque ratio is approximately 2 : 1 at stall).

Clockwise motion of the rear internal gear causes the rear pinions to turn clockwise to drive the sun gear anti-clockwise. In turn, the sun gear drives the front pinions clockwise, thus turning the front internal gear, output carrier, and output shaft clockwise in a reduction ratio of approximately 2·5 : 1. Reaction of the front pinions against the front internal gear is taken by reaction carrier and roller clutch assembly to the transmission case. (Approximate stall ratio – 5 : 1).

Oil flow

When the selector lever is moved to either Drive or Intermediate position, the manual valve is repositioned to allow line pressure to enter the drive circuit. Drive oil then flows to the following (*see Fig. T122*):

Forward clutch
1–2 Shift valve
Governor assembly
1–2 Accumulator valve
Detent regulator valve

Basic control

Drive oil is directed to the forward clutch where it acts on two areas of the clutch piston to apply the forward clutch. The first, or inner area, is fed through an unrestricted passage. The outer area is fed through an orifice to ensure a smooth change into Drive.

Drive oil at the governor assembly is regulated to a variable pressure. This pressure increases with car speed and acts against the ends of the 1–2 and 2–3 shift valves and an area on the modulator valve.

Drive oil is regulated also to another variable pressure at the 1–2 accumulator valve. This pressure is controlled by modulator oil and is directed to the rear servo. 1–2 accumulator oil at the rear servo acts on the accumulator piston.

In addition, to maintain the lower pressure in the 1–2 accumulator passage, the 1–2 accumulator valve intermittently uncovers the Low oil passage and oil is exhausted at the manual valve.

Summary

The converter is filled. The forward clutch is applied. The transmission is in first gear.

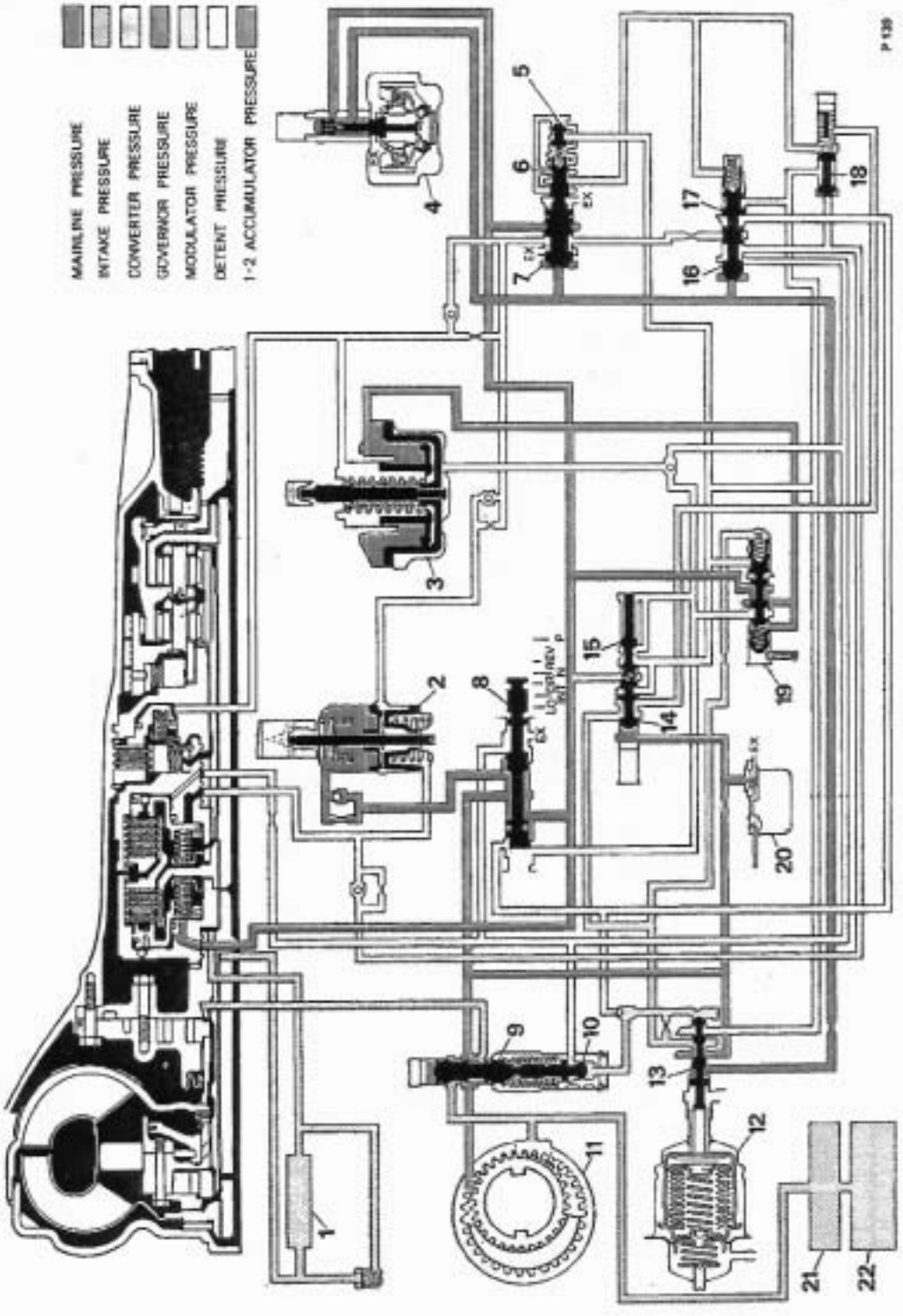

FIG. T122 DRIVE RANGE—1ST GEAR

1 Heat exchanger
2 Front servo
3 Rear servo
4 Governor assembly
5 Regulator plug
6 1–2 detent valve
7 1–2 valve
8 Manual valve
9 Pressure regulator
10 Boost valve
11 Pump
12 Vacuum modulator
13 Modulator valve
14 Detent valve
15 Regulator valve
16 2–3 valve
17 2–3 modulator valve
18 3–2 valve
19 1–2 accumulator valve
20 Detent solenoid
21 Oil strainer
22 Sump

T.S.D. 2476 September 1971 Printed in Great Britain

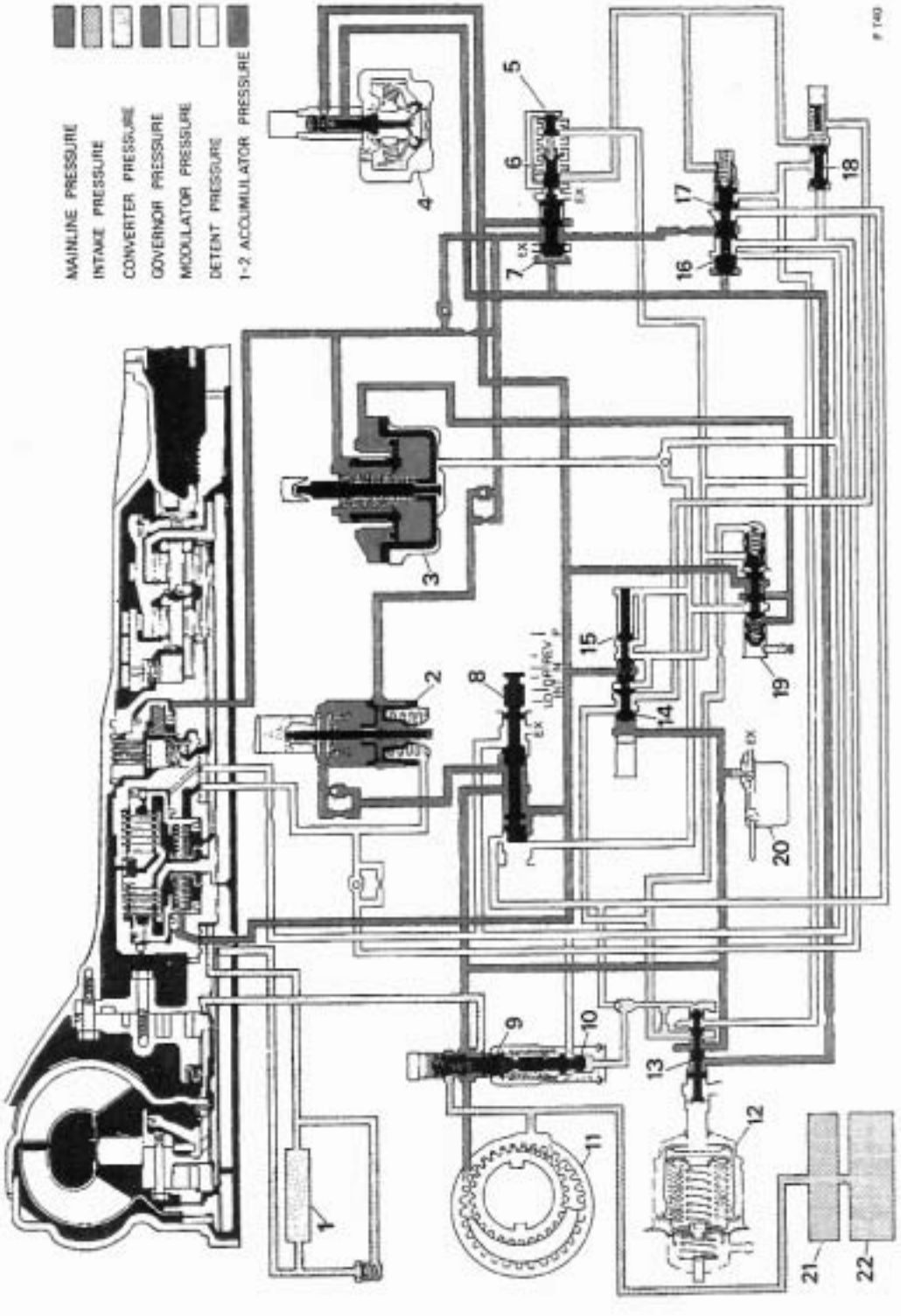

FIG. T123 DRIVE RANGE—2ND GEAR

1 Heat exchanger
2 Front servo
3 Rear servo
4 Governor assembly
5 Regulator plug
6 1–2 detent valve
7 1–2 valve
8 Manual valve
9 Pressure regulator
10 Boost valve
11 Pump
12 Vacuum modulator
13 Modulator valve
14 Detent valve
15 Regulator valve
16 2–3 valve
17 2–3 modulator valve
18 3–2 valve
19 1–2 accumulator valve
20 Detent solenoid
21 Oil strainer
22 Sump

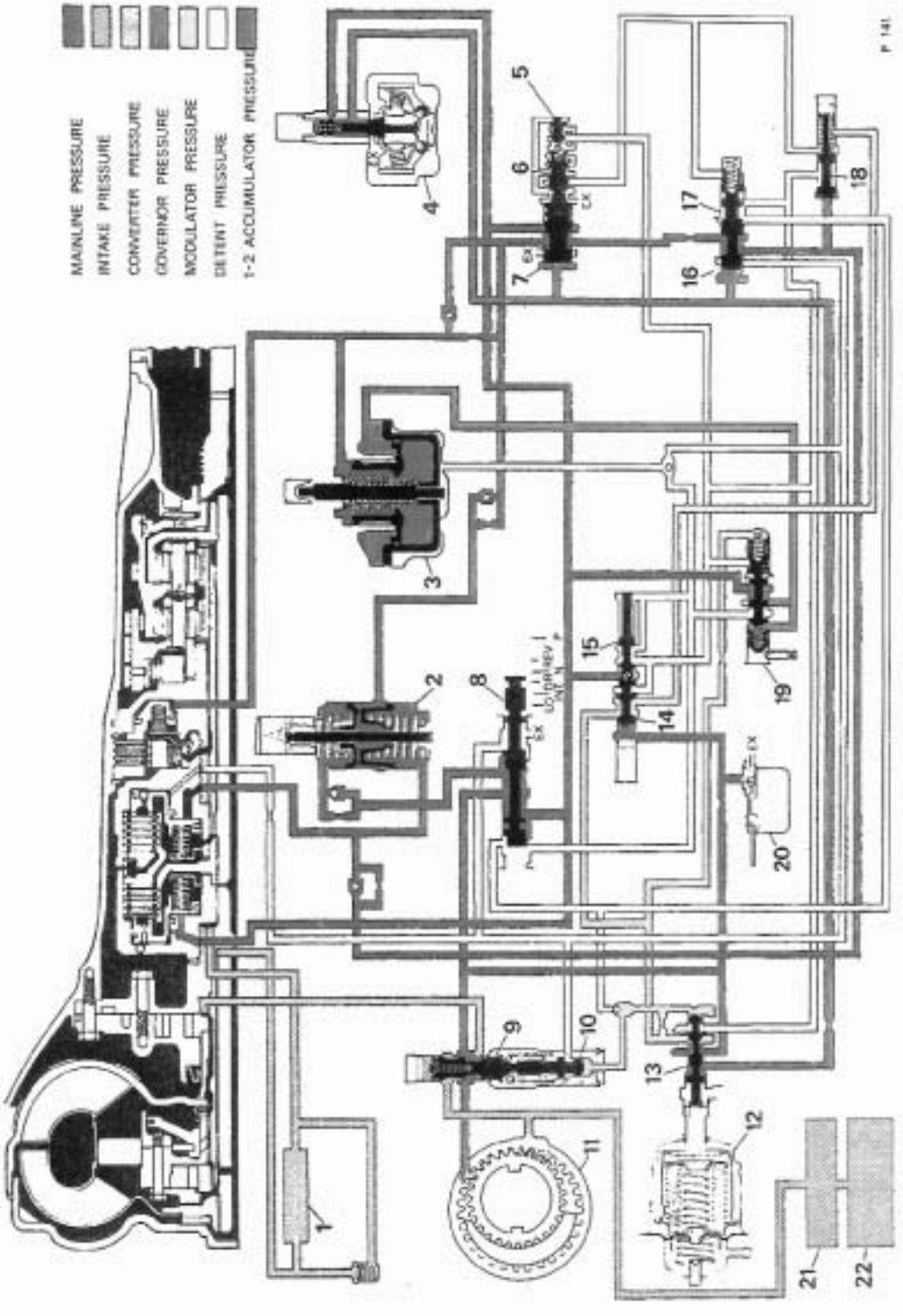

FIG. T124 DRIVE RANGE—3RD GEAR

1 Heat exchanger
2 Front servo
3 Rear servo
4 Governor assembly
5 Regulator plug
6 1–2 detent valve
7 1–2 valve
8 Manual valve
9 Pressure regulator
10 Boost valve
11 Pump
12 Vacuum modulator
13 Modulator valve
14 Detent valve
15 Regulator valve
16 2–3 valve
17 2–3 modulator valve
18 3–2 valve
19 1–2 accumulator valve
20 Detent solenoid
21 Oil strainer
22 Sump

T.S.D. 2476 September 1971 Printed in Great Britain

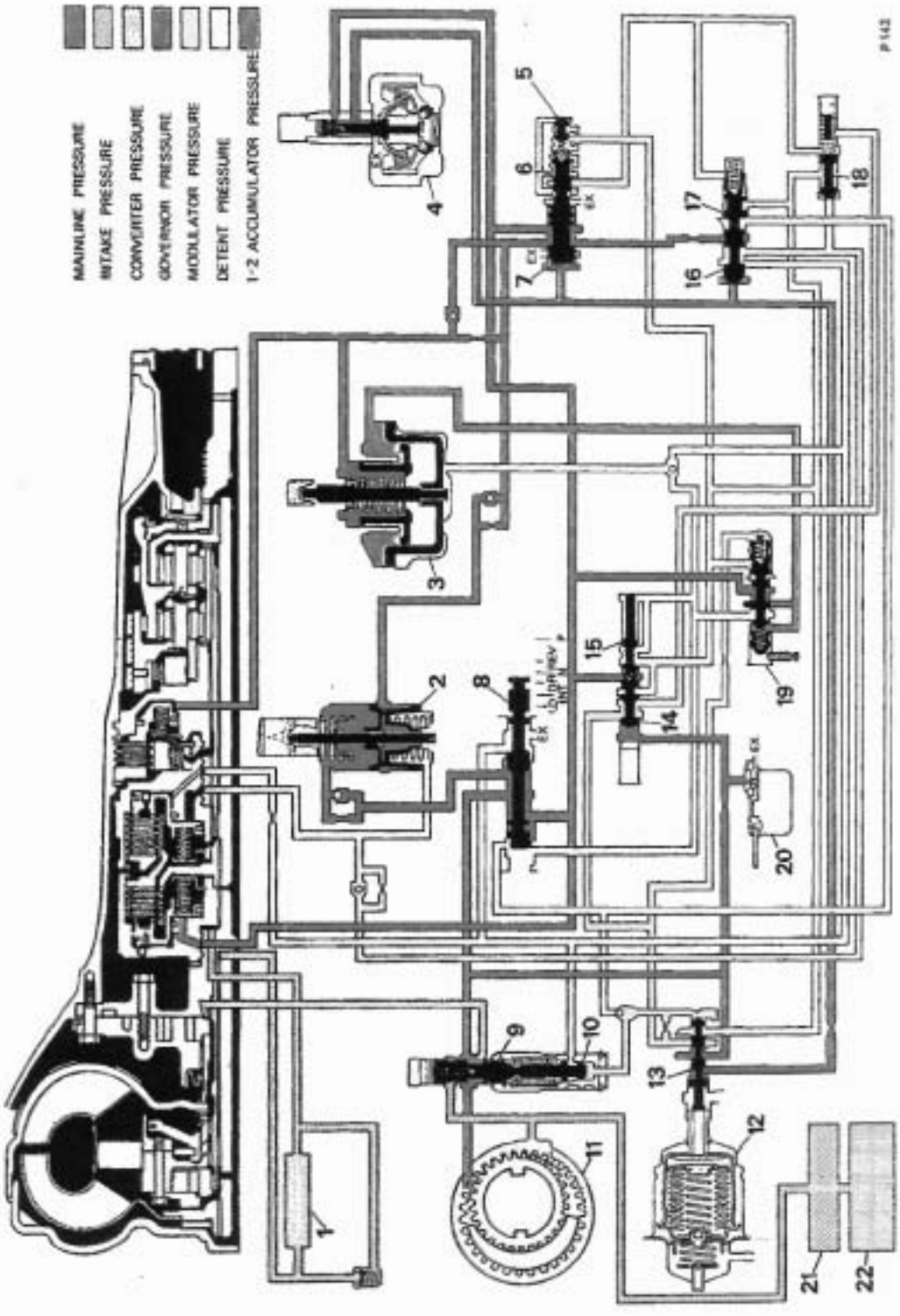

FIG. T125 PART THROTTLE DOWN-CHANGES

1 Heat exchanger
2 Front servo
3 Rear servo
4 Governor assembly
5 Regulator plug
6 1–2 detent valve
7 1–2 valve
8 Manual valve
9 Pressure regulator
10 Boost valve
11 Pump
12 Vacuum modulator
13 Modulator valve
14 Detent valve
15 Regulator valve
16 2–3 valve
17 2–3 modulator valve
18 3–2 valve
19 1–2 accumulator valve
20 Detent solenoid
21 Oil strainer
22 Sump

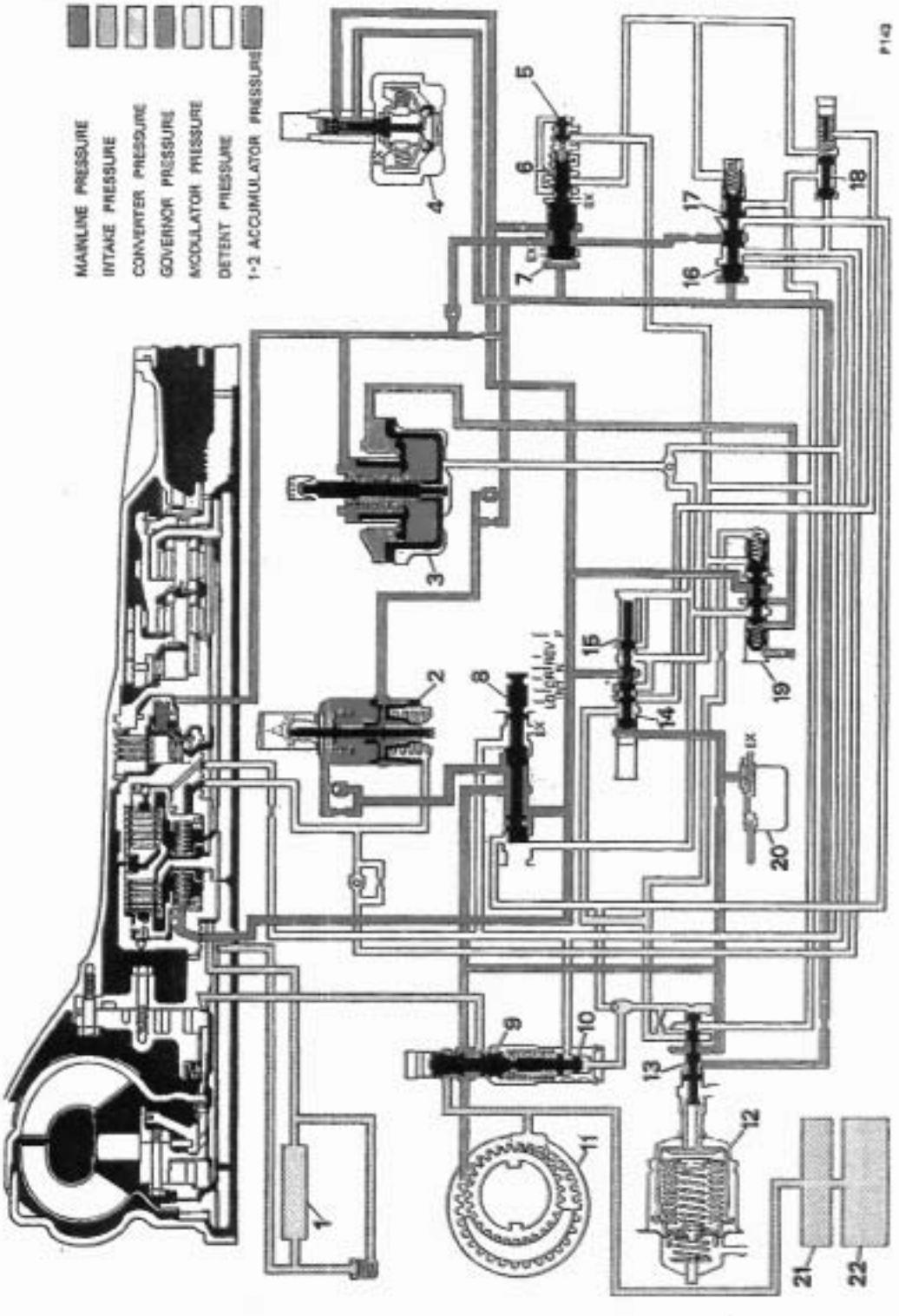

FIG. T126 DETENT DOWN-CHANGE

1 Heat exchanger
2 Front servo
3 Rear servo
4 Governor assembly
5 Regulator plug
6 1–2 detent valve
7 1–2 valve
8 Manual valve
9 Pressure regulator
10 Boost valve
11 Pump
12 Vacuum modulator
13 Modulator valve
14 Detent valve
15 Regulator valve
16 2–3 valve
17 2–3 modulator valve
18 3–2 valve
19 1–2 accumulator valve
20 Detent solenoid
21 Oil strainer
22 Sump

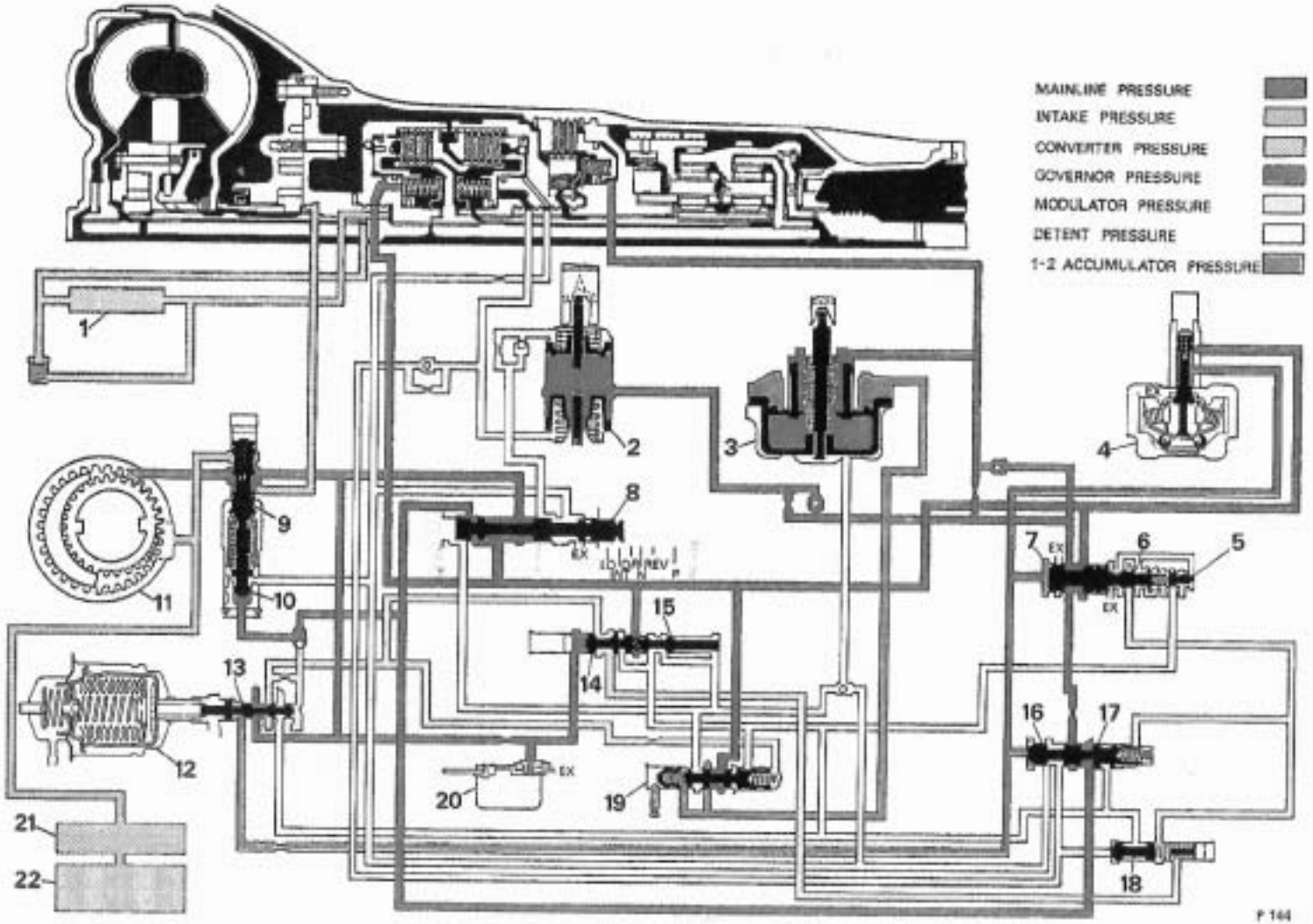

FIG. T127 INTERMEDIATE RANGE 2ND GEAR

1 Heat exchanger
2 Front servo
3 Rear servo
4 Governor assembly
5 Regulator plug
6 1–2 detent valve
7 1–2 valve
8 Manual valve
9 Pressure regulator
10 Boost valve
11 Pump
12 Vacuum modulator
13 Modulator valve
14 Detent valve
15 Regulator valve
16 2–3 valve
17 2–3 modulator valve
18 3–2 valve
19 1–2 accumulator valve
20 Detent solenoid
21 Oil strainer
22 Sump

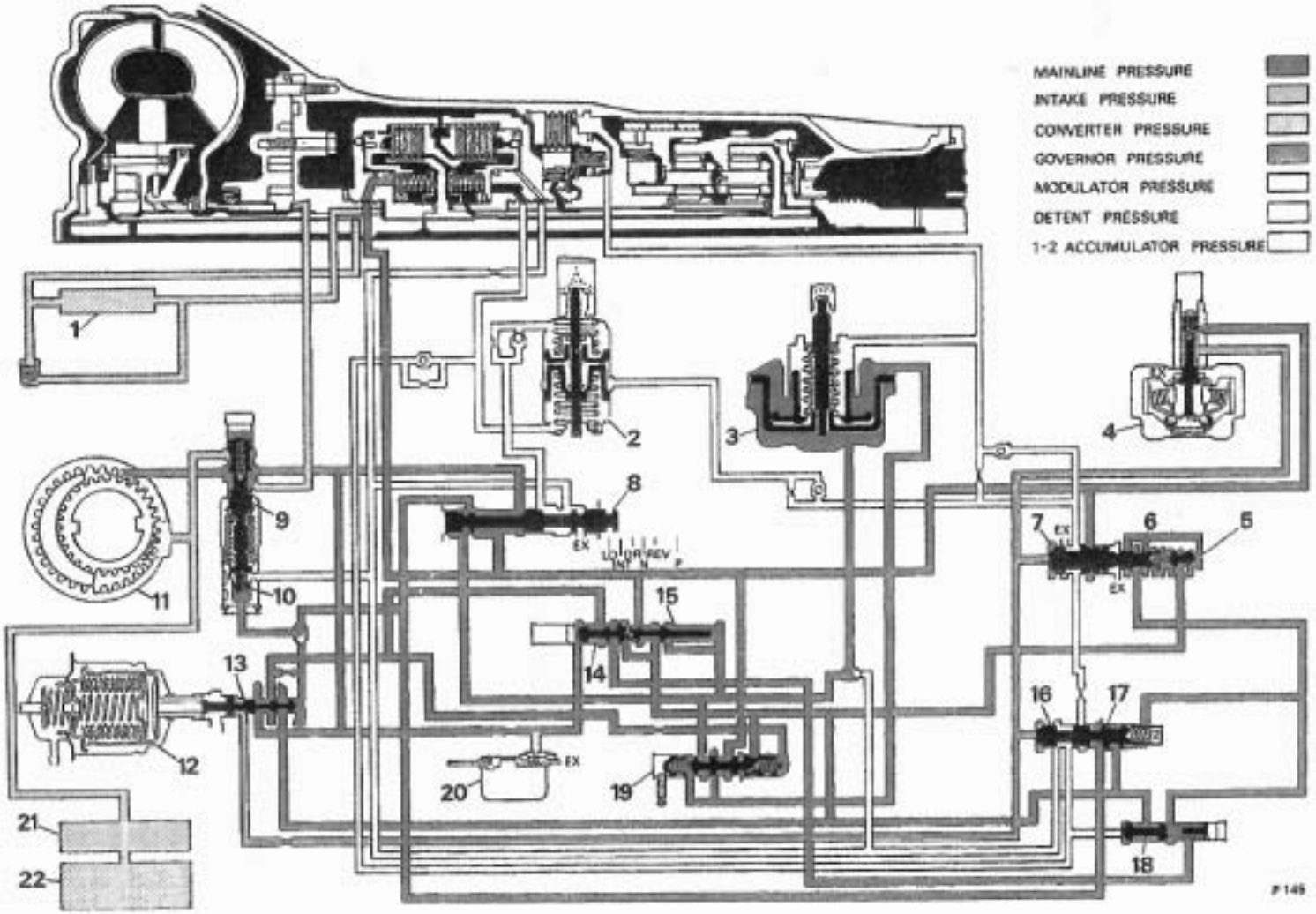

FIG. T128 LOW RANGE—1ST GEAR

1 Heat exchanger
2 Front servo
3 Rear servo
4 Governor assembly
5 Regulator plug
6 1-2 detent valve
7 1-2 valve
8 Manual valve
9 Pressure regulator
10 Boost valve
11 Pump
12 Vacuum modulator
13 Modulator valve
14 Detent valve
15 Regulator valve
16 2-3 valve
17 2-3 modulator valve
18 3-2 valve
19 1-2 accumulator valve
20 Detent solenoid
21 Oil strainer
22 Sump

T.S.D. 2476 September 1971 Printed in Great Britain

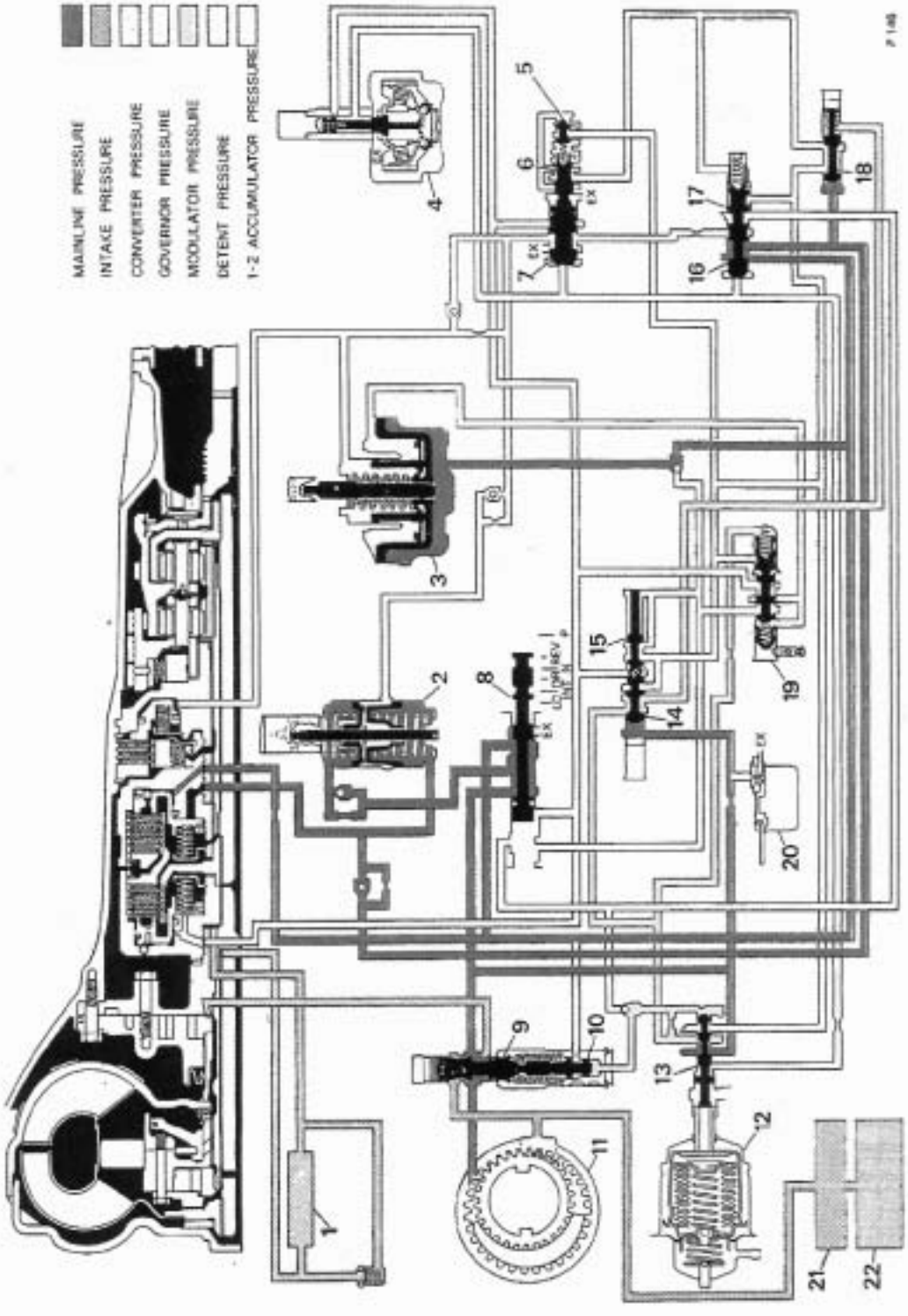

FIG. T129 REVERSE

1 Heat exchanger
2 Front servo
3 Rear servo
4 Governor assembly
5 Regulator plug
6 1–2 detent valve
7 1–2 valve
8 Manual valve
9 Pressure regulator
10 Boost valve
11 Pump
12 Vacuum modulator
13 Modulator valve
14 Detent valve
15 Regulator valve
16 2–3 valve
17 2–3 modulator valve
18 3–2 valve
19 1–2 accumulator valve
20 Detent solenoid
21 Oil strainer
22 Sump

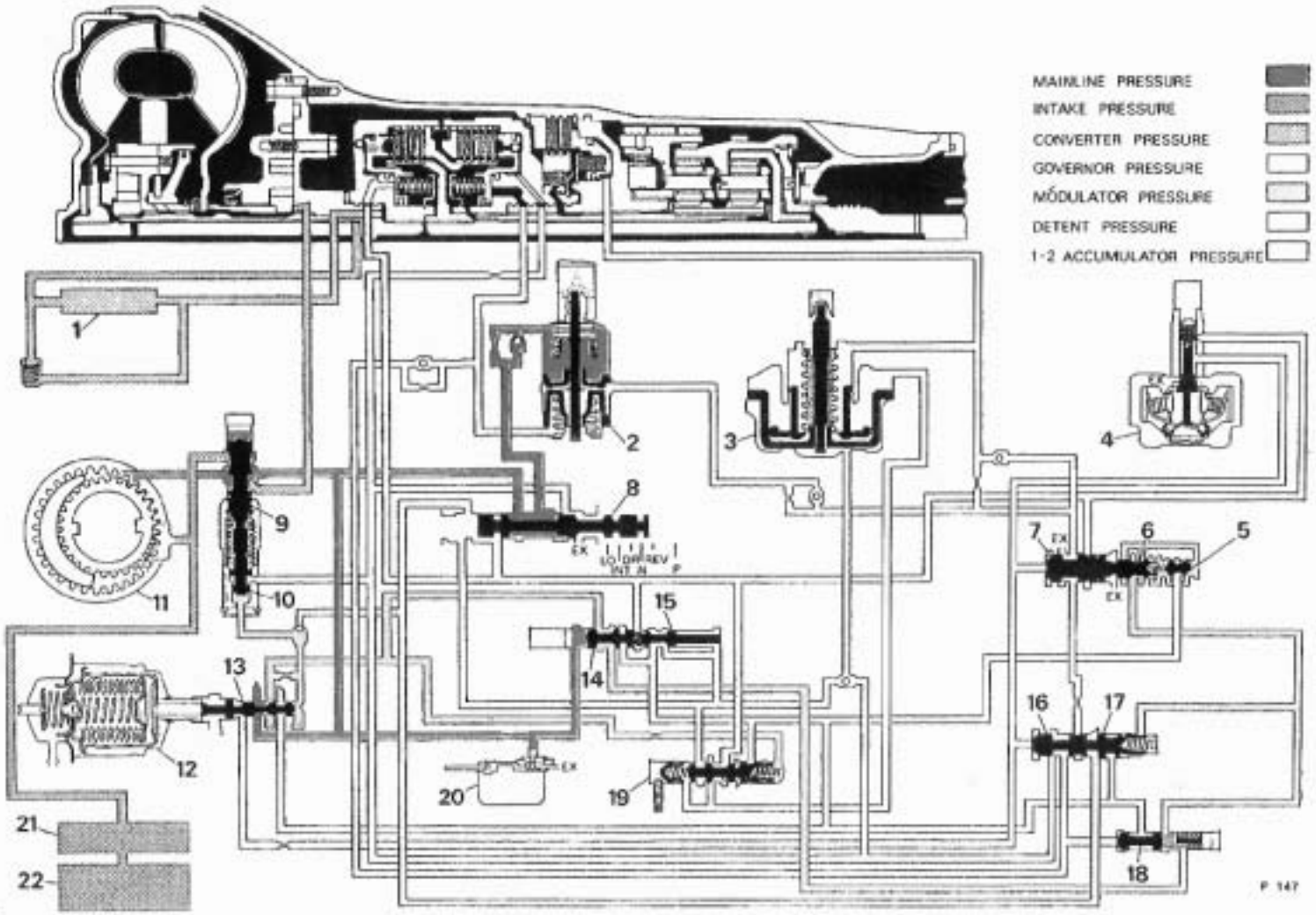

FIG. T130 NEUTRAL—ENGINE RUNNING

1 Heat exchanger
2 Front servo
3 Rear servo
4 Governor assembly
5 Regulator plug
6 1-2 detent valve
7 1-2 valve
8 Manual valve
9 Pressure regulator
10 Boost valve
11 Pump
12 Vacuum modulator
13 Modulator valve
14 Detent valve
15 Regulator valve
16 2-3 valve
17 2-3 modulator valve
18 3-2 valve
19 1-2 accumulator valve
20 Detent solenoid
21 Oil strainer
22 Sump

Printed in Great Britain
September 1971
T.S.D. 2476

Drive—Second gear

Power flow

Forward clutch – applied. Direct clutch – released. Intermediate clutch – applied. Roller clutch – ineffective. Front band – released. Intermediate roller clutch – effective. Rear band – released.

In second gear the intermediate clutch is applied to allow the intermediate roller clutch to hold the sun gear against anti-clockwise rotation. Turbine torque through the forward clutch is then applied clockwise through the mainshaft to the rear internal gear.

Clockwise rotation of the rear internal gear turns the rear pinions clockwise against the stationary sun gear. This causes the output carrier and output shaft to turn clockwise in a reduction ratio of approximately 1·5 : 1.

Note Further reduction is possible at low speeds, due to the torque multiplication provided by the converter.

Oil flow

As the car speed and the governor pressure increases, the force of governor oil acting on the 1–2 shift valve will overcome the force of regulated modulator oil pressure. This allows the 1–2 shift valve to open, permitting drive oil to enter the intermediate clutch passage.

Intermediate clutch oil from the 1–2 shift valve is directed to the following (*see Fig. T123*):

Intermediate clutch
Rear servo
Front servo and accumulator pistons
2–3 Shift valve

Basic control

Intermediate clutch oil from the 1–2 shift valve seats a one-way check ball and flows through an orifice to the intermediate clutch piston to apply the intermediate clutch. At the same time, intermediate clutch oil moves the accumulator piston against the 1–2 accumulator oil and accumulator spring to maintain lower pressure in the clutch during a 1–2 shift for a smooth clutch application. Intermediate clutch oil seats a second one-way check ball and flows to the front servo and accumulator pistons. Intermediate clutch oil is also directed to a land of the 2–3 shift valve.

Summary

The forward and intermediate clutches are applied. The transmission is in second gear.

Drive—Third gear

Power flow

Forward clutch – applied. Direct clutch – applied. Intermediate clutch – applied. Roller clutch – ineffective. Front band – released. Intermediate roller clutch – ineffective. Rear band – released.

In direct drive, engine torque is transmitted from the converter, through the forward clutch to the mainshaft and rear internal gear. Because the direct clutch is applied, equal power is also transmitted to the sun gear shaft and the sun gear. Since both sun gear and internal gears are now turning at the same speed, the planetary gear set is essentially locked and turns as one unit in direct drive or a ratio of 1 : 1.

Oil flow

As car speed and governor pressure increase, the force of governor oil acting on the 2–3 shift valve overcomes the force of 2–3 shift valve spring and modulator oil. This allows the 2–3 shift valve to move, feeding intermediate clutch oil to the direct clutch passage.

Direct clutch oil from the 2–3 shift valve is directed to the following (*see Fig. T124*):

Direct clutch
Front accumulator piston
3–2 Valve

Basic control

Direct clutch oil from the 2–3 shift valve flows past a one-way check valve to the inner area of the direct clutch piston to apply the direct clutch. Simultaneously, direct clutch oil is fed to the front accumulator piston. Pressure of the direct clutch oil, combined with the accumulator spring, moves the accumulator and servo pistons against servo oil. This acts as an accumulator for a smooth direct clutch application.

Direct clutch oil is supplied also to the 3–2 valve to move the valve against modulator pressure. This cuts off modulator oil to the 1–2 regulator and 2–3 modulator valves and allows the transmission to utilize the torque multiplying characteristics of the converter during medium throttle operation without down-changing.

Summary

The forward, intermediate and direct clutches are applied. The transmission is in third gear (direct drive).

Part throttle down-change

Power flow

Forward clutch – applied. Direct clutch – released in second. Direct clutch – applied in third. Intermediate clutch – applied. Roller clutch – ineffective. Front band – released. Intermediate roller clutch – effective in second. Intermediate roller clutch – ineffective in third. Rear band – released.

In second gear, the intermediate clutch is applied to allow the intermediate roller clutch to hold the sun

gear against anti-clockwise rotation. Turbine torque through the forward clutch is then applied clockwise through the mainshaft to the rear internal gear.

Clockwise rotation of the rear internal gear turns the rear pinions clockwise against the stationary sun gear. This causes the output carrier and output shaft to turn clockwise in a reduction ratio of approximately 1·5 : 1.

Oil flow

A part throttle 3–2 down-change can be accomplished below approximately 33 m.p.h. (53 k.p.h.) by depressing the accelerator far enough to raise modulator pressure to approximately 87 lb/sq.in. (6,1 kg/sq.cm.). Modulator pressure and the 3–2 valve spring will move the 3–2 valve against direct clutch oil and allow modulator oil to act on the 2–3 modulator valve. This moves the 2–3 valve train against governor oil and changes the transmission to second gear (*see Fig. T125*).

Detent down-change

Power flow

Forward clutch – applied. Direct clutch – released in second. Direct clutch – applied in third. Intermediate clutch – applied. Roller clutch – ineffective. Front band – released. Intermediate roller clutch – effective in second. Intermediate roller clutch – ineffective in third. Rear band – released.

In second gear, the intermediate clutch is applied to allow the intermediate roller clutch to hold the sun gear against anti-clockwise rotation. Turbine torque through the forward clutch is then applied clockwise through the mainshaft to the rear internal gear.

Clockwise rotation of the rear internal gear turns the rear pinions clockwise against the stationary sun gear. This causes the output carrier and output shaft to turn clockwise in a reduction ratio of approximately 1·5 : 1.

Oil flow

While operating at speeds below approximately 70 m.p.h. (113 k.p.h.) a forced or detent 3–2 down-change is possible. The down-change is effected by depressing the accelerator pedal so that the kick-down button is depressed and the kick-down switch actuates the detent solenoid. The detent solenoid opens an orifice that allows line oil at the detent valve to be exhausted, thus permitting the detent regulator valve to operate. Line oil acting on the detent valve and solenoid is supplied by a small orifice.

Drive oil on the detent regulator valve is then regulated to a pressure of approximately 70 lb/sq.in. (4,9 kg/sq.cm.) and called detent oil. Detent oil is then routed to the following (*see Fig. T126*):

Modulator passage
1–2 Regulator valve
2–3 Modulator valve
3–2 Valve
1–2 Primary accumulator valve
Vacuum modulator valve

Detent oil in the modulator passage and at the 2–3 modulator valve will close the 2–3 shift valve, changing the transmission to second gear.

A detent 2–1 down-change can also be accomplished below approximately 20 m.p.h. (32 k.p.h.) because detent oil is directed to the 1–2 regulator valve. This allows detent oil to act on the 1–2 regulator, and 1–2 detent valve to close the 1–2 shift valve, changing the transmission to first gear.

Detent oil is directed also to the modulator valve to prevent modulator pressure from regulating below 70 lb/sq.in. (4,9 kg/sq.cm.) at high speeds or at high altitudes.

Intermediate—Second gear

Power flow

Forward clutch – applied. Direct clutch – released. Intermediate clutch – applied. Roller clutch – ineffective. Front band – applied. Intermediate roller clutch – effective. Rear band – released.

In second gear, the intermediate clutch is applied to allow the intermediate roller clutch to hold the sun gear against anti-clockwise rotation. Turbine torque through the forward clutch is now applied clockwise through the mainshaft to the rear internal gear.

Clockwise rotation of the rear internal gear turns the rear pinions clockwise against the stationary sun gear. This causes the output carrier and output shaft to turn clockwise in a reduction ratio of approximately 1·5 : 1.

In second gear, engine braking is provided by the front band as it holds the sun gear fixed. Without the band applied, the sun gear would overrun the intermediate roller clutch.

Oil flow

When the selector lever is in Intermediate range, intermediate oil from the manual valve is directed to the following: (*see Fig. T127*).

Pressure boost valve
2–3 Shift valve

Intermediate oil at the boost valve will increase line pressure to 150 lb/sq.in. (10,5 kg/sq.cm.). This increased intermediate oil pressure at the 2–3 shift valve will close the 2–3 shift valve, regardless of car speed.

For engine braking the front band is applied by exhausting servo oil at the manual valve. This allows intermediate clutch oil, acting on the servo piston, to move the piston and apply the front band. Once the

Printed in Great Britain
September 1971
T.S.D. 2476

transmission is in second gear – Intermediate range, it cannot change to third gear regardless of car speed.

Summary

The forward and intermediate clutches and front band are applied. The transmission is in second gear – Intermediate range.

Low range—First gear

Power flow

Forward clutch – applied. Direct clutch – released. Intermediate clutch – released. Roller clutch – effective. Front band – released. Intermediate roller clutch–ineffective. Rear band – applied.

With the selector lever in Low range, the forward clutch is applied. This delivers turbine torque to the mainshaft and turns the rear internal gear clockwise. (Converter torque ratio is approximately 2·0 : 1 at stall).

Clockwise motion of the rear internal gear causes the rear pinions to turn clockwise to drive the sun gear anti-clockwise. In turn, the sun gear drives the front pinions clockwise, thus turning the front internal gear, output carrier and output shaft clockwise in a reduction ratio of approximately 2·5 : 1. The reaction of the front pinions against the front internal gear is taken by the reaction carrier and roller clutch assembly to the transmission case. (Total stall ratio is approximately 5 : 1).

Downhill or overrun braking is provided in Low range by applying the rear band as this prevents the reaction carrier from overrunning the roller clutch.

Oil flow

Maximum downhill braking can be attained at speeds below 40 m.p.h. (64 k.p.h.) with the selector lever in Low position as this directs Low oil from the manual valve to the following: (*see Fig. T128*).

Rear servo
1–2 Accumulator valve
Detent regulator valve
1–2 Shift valve

Basic control

Low oil flows past a ball check to the apply side of the rear servo piston and to the 1–2 accumulator valve to raise the 1–2 accumulator oil to line pressure for a smooth band application.

Low oil acts on the detent regulator valve. Combined with the detent spring, Low oil holds the detent valve against line oil acting on the detent valve, causing drive oil to flow through the detent regulator valve into the detent and modulator passages. Modulator and detent oil at line pressure acting on the 1–2 regulator and 1–2 detent valve overcomes governor oil and Low oil on the 1–2 shift valve at any vehicle speed below approximately 40 m.p.h. (64 k.p.h.) and the transmission will change to first gear.

In first gear – Low range, the transmission cannot up-change to second gear regardless of car or engine speed.

Summary

The forward clutch and rear band are applied. The transmission is in first gear – Low range.

Reverse

Power flow

Forward clutch – released. Direct clutch – applied. Intermediate clutch – released. Roller clutch – ineffective. Front band – released. Intermediate roller clutch–ineffective. Rear band – applied.

In Reverse, the direct clutch is applied to direct turbine torque to the sun gear shaft and sun gear. The rear band is also applied, holding the reaction carrier.

Clockwise torque to the sun gear causes the front pinions and front internal gear to turn anti-clockwise in reduction. The front internal gear is connected directly to the output shaft, thus providing the reverse output gear ratio approximately 2 : 1. The reverse torque multiplication at stall (converter and gear ratios) is approximately 4 : 1.

Oil flow

When the selector lever is moved to the Reverse position, the manual valve is repositioned to allow oil at line pressure to enter the reverse circuit. Reverse oil then flows to the following (*see Fig. T129*):

Direct clutch
2–3 Shift valve
Rear servo piston
Pressure boost valve

Basic control

Reverse oil from the manual valve flows to the large area of the direct clutch piston and to the 2–3 shift valve. From the 2–3 shift valve, it enters the direct clutch passage and is directed to the small area of the direct clutch piston to apply the direct clutch.

Reverse oil flows to the rear servo and acts on the servo piston to apply the rear band. Reverse oil acts also on the pressure boost valve to boost line pressure.

Summary

The direct clutch and the rear band are applied. The transmission is in Reverse.

Park or Neutral—Engine running

Power flow

Forward clutch – released. Direct clutch – released. Intermediate clutch – released. Roller clutch – ineffec-

tive. Front band – released. Intermediate roller clutch–ineffective. Rear band – released.

In Neutral or Park no bands or clutches are applied, therefore no power is transmitted.

Oil flow

Whenever the engine is running at idle with the selector lever in 'P' or 'N', oil from the pump is directed to the following (*see Fig. T130*):

Pressure regulator valve	Manual valve
Torque converter	Detent valve
Oil cooler	Detent solenoid
Oil cooler by-pass valve	Vacuum modulator valve
Lubrication system	Front servo (Neutral only)
Stator valve (early cars only)	Stator solenoid and valve (early cars only)

Cooling and lubrication

Oil flows from the pump to the pressure regulator valve which regulates pump pressure. When the pump output exceeds the demand of line pressure, oil from the pressure regulator is directed to the converter feed passage to fill the converter. Oil from the converter is directed to the transmission heat exchanger by-pass valve. Oil from the heat exchanger is directed to the transmission lubrication system.

The heat exchanger by-pass valve permits oil to be fed directly from the converter to the lubrication circuits if the heat exchanger becomes restricted.

Note On early cars fitted with a stator valve and solenoid, when the pump output exceeds the demand of line pressure, oil from the pressure regulator is directed to the transmission heat exchanger by-pass valve. Oil from the heat exchanger is directed to the transmission lubrication system.

Line pressure acts on the following:

Manual valve
Detent valve
Detent solenoid
Modulator valve
Stator valve (early cars only)
Stator solenoid (early cars only)

Line pressure at the modulator valve is regulated to a pressure called modulator oil, which acts on the pressure boost valve, 1–2 accumulator and primary valves, and passes through the detent valve and the 3–2 valve to the 1–2 and 2–3 valve trains.

Summary

The torque converter is filled, (early cars—stator blades are at high angle) and all clutches and bands are released. The transmission is in Neutral.

Printed in Great Britain
September 1971
T.S.D. 2476

Section T2
SERVICING

Careful and regular maintenance of the Transmission is necessary to ensure maximum reliability; the following table gives the recommended servicing periods.

SERVICING PERIODS

ESSENTIAL MAINTENANCE	PERIOD
Check oil level	After first 3 000 miles (5 000 km.) then every 6 000 miles (10 000 km.)
Drain transmission and fill with new fluid	Every 12 000 miles (20 000 km.)
Fit new intake strainer	After first 24 000 miles (40 000 km.)
ADDITIONAL MAINTENANCE	**PERIOD**
Lubricate control linkage Road test for satisfactory performance	Every 6 000 miles (10 000 km.)

It is absolutely essential that great attention be paid to cleanliness whenever the interior of the transmission is exposed and when work is being carried out on a particular unit belonging to the transmission. The smallest particle of dirt in the oil may interfere with the correct operation of the valves, particularly in the control valve unit.

Fluid level—To check

Car attitude and **fluid temperature** are particularly important when checking the fluid level on a Torque Converter Transmission. Careful attention to the following procedures is necessary in order to determine the actual fluid level.

Fluid recommendations

Whenever fluid is added, use only a **Dexron** fluid. For a complete list of the **Dexron** lubricants currently approved for use in this transmission refer to Chapter D of this Workshop Manual T.S.D. 2476 or the latest Service Bulletin.

Transmission dipstick and filler tube

The transmission dipstick and filler tube are situated on the right-hand side of the engine and are easily accessible when the bonnet is raised (*see Fig. T131*).

To check and add fluid

The level of the transmission fluid should be checked at every engine oil change. The full 'MAX' and low 'MIN' marks on the dipstick are approximately $\frac{7}{8}$ pint (Imp.), 1 pint (U.S.), 0,45 litre apart and should be used to determine the correct fluid level at the normal operating temperature of 76·7°C., (170°F.). Careful attention to transmission fluid temperature is necessary because the correct fluid level at low operating temperatures will be below the 'MIN' mark on the dipstick (*see Fig. T131*), and the correct fluid level at higher operating temperatures will rise above the 'MAX' mark. Fluid level must always be checked when the car is on an even, level surface and with the engine running to ensure that the converter is full. To determine the correct fluid level proceed as follows.

1. Run the car on the road for approximately 20 miles. This will ensure that the transmission has reached normal operating temperature.

2. Position the car on a level surface and firmly apply the handbrake.

3. Allow the engine to idle slowly, move the gear range selector lever through each range, return to the **Park** position and immediately check the fluid level.

4. With the engine running, add fluid as required to bring it to the correct level (*see Fig. T131*).

Note Do not overfill.

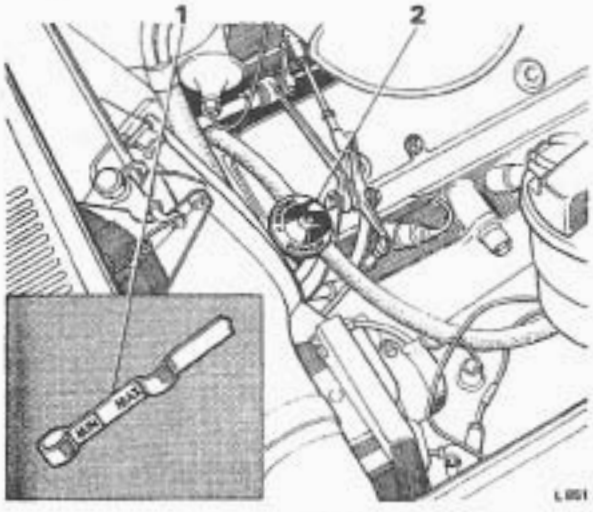

FIG. T131 CHECKING THE OIL LEVEL

1 Minimum and Maximum oil level marks
2 Transmission oil dipstick

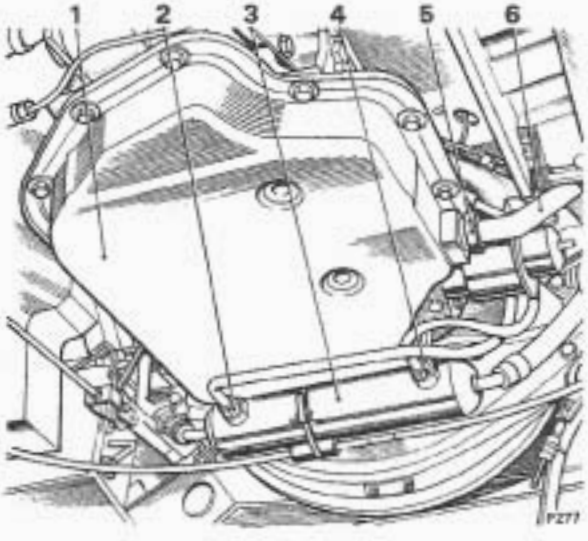

FIG. T132 TRANSMISSION SUMP

1 Transmission sump
2 Fluid inlet from transmission
3 Fluid heat exchanger
4 Fluid outlet to transmission
5 Fluid drain point
6 Dipstick filler tube

To drain the sump and renew the intake pipe and strainer assembly

1. Position the car on a ramp or over an inspection pit.

2. Place a clean container, minimum capacity 5 pints (Imp.) 6 pints (U.S.) 2,8 litres under the sleeve nut which secures the filler tube to the side of the sump.

3. Slacken the clips which secure the filler tube. Slacken the sleeve nut at the base of the tube and allow the fluid to drain into the container.

4. Remove the dipstick and filler tube from the sump.

Early Cars Only

5. Unscrew the two unions securing the transmission fluid inlet and outlet pipes to the heat exchanger (*see Fig. T132*), withdraw the pipes and collect any fluid in a container. Remove the four setscrews (two at each end) securing the heat exchanger to the bell housing bottom cover. Lower the heat exchanger on the flexible coolant pipes to gain access to the two forward sump retaining setscrews.

Note It should not be necessary to release the flexible coolant pipes.

All Cars

6. Remove the thirteen setscrews securing the sump.

7. Remove the sump; discard the gasket.

8. Drain the remainder of the fluid from the sump.

9. Examine the residue of the sump for signs of wear in the transmission then wash the sump in clean paraffin (kerosene). Thoroughly dry the sump with clean compressed air.

10. Remove the intake pipe and strainer; discard the 'O' ring.

11. Fit a new 'O' ring into the intake pipe bore in the transmission case then fit the new intake pipe and strainer. Fit the strainer retaining bolt.

Important **There is more than one combination of strainer and sump fitted to the Torque Converter Transmission. If an incorrect combination is fitted, a transmission failure will result.**

12. Fit the sump, using a new gasket. Torque tighten the setscrews (refer to Chapter P of this Workshop Manual T.S.D. 2476).

13. Fit the oil filler tube, positioning the clips before tightening the sleeve nut.

14. Add 8 pints (Imp.) 9⅝ pints (U.S.) 4,5 litres of fresh clean transmission fluid through the filler tube.

Note When draining the sump and **not** renewing the intake pipe and strainer, add only 5 pints (Imp.) 6 pints (U.S.) 2,8 litres of fluid.

15. Run the engine at a fast idle for approximately 90 seconds with the selector lever in 'P' position.

Printed in Great Britain
September 1971
T.S.D. 2476

16. Reduce the engine speed to slow idle, move the gear range selector lever through each range, return to the **Park** position. Immediately, check the fluid level with the engine running and the car on level surface. This should be approximately 0·0625in. (1,59 mm.) **below** the 'MIN' mark when the transmission is cold 20°C. (68°F.).

Caution **Do not overfill** as foaming may occur when the fluid warms up. If the fluid level is too low, especially when cold, complete loss of drive may result after quick stops. Extremely low fluid levels will result in damage to the transmission.

17. Finally check that the transmission fluid level is correct **(see To check and add fluid — operations 1-4 inclusive).**

To fill a dry transmission unit

The fluid capacity of a Torque Converter Transmission, including the torque converter, is approximately 18⅜ pints (Imp.) 22½ pints (U.S.) 10,6 litres, but the correct level is determined by the marks on the dipstick rather than by the quantity of fluid added. It is important that the correct level be maintained. When the transmission has been overhauled and a complete fill is required, including the torque converter, proceed as follows.

1. Pour approximately 11½ pints (Imp.) 14 pints (U.S.) 6,5 litres through the filler tube.

2. Run the engine at a fast idle for approximately 90 seconds with the selector lever in 'P' position.

3. Reduce the engine speed to slow idle, move the gear range selector lever through each range, return to the **Park** position. Immediately, check the fluid level with the engine running and the car on level surface. This should be approximately 0·0625in. (1,59 mm.) **below** the 'MIN' mark when the transmission is cold 20°C. (68°F.).

The transmission sump should be drained every 12 000 miles (20 000 km.) or 12 months, whichever occurs first. Fresh fluid should be added to maintain the correct level on the dipstick (*see Fig. T131*).

The fluid intake system incorporates an intake pipe and strainer assembly. This assembly should be renewed after the first 24000 miles (40 000 km.) or two years, whichever occurs first. In the event of a major failure in the transmission, the strainer must be renewed.

Important **There is more than one combination of strainer and sump fitted to the Torque Converter Transmission. If an incorrect combination is fitted, a transmission failure will result.**

To check for leaks

Whenever the transmission has been dismantled, completely or partially, the following procedure must be observed to minimise the possibility of fluid leakage.

1. Always fit new gaskets and 'O' ring seals.
2. Use a small amount of petroleum jelly to hold a gasket in position during assembly.
3. Do not use a sealing compound (e.g. Wellseal) with a gasket.
4. Ensure that the composition cork and paper gaskets are not wrinkled or creased when fitted. Ensure that gaskets have not shrunk or stretched during storage.
5. Ensure that square-sectioned 'O' rings are correctly fitted and are not twisted.
6. Ensure that all mating faces are clean and free from burrs and damage.
7. Torque tighten bolts, setscrews etc., to the torque figures given in Chapter P of this Workshop Manual T.S.D. 2476.

Possible leakage points

When examining the transmission for leaks, determine whether the fluid originates from the transmission or the engine. The original factory fill fluid in the transmission is formulated with a red aniline dye to assist in locating the source of leakage. If the colour of the dye cannot be detected in the transmission fluid, add a red aniline dye preparation to the fluid. Red dye appearing in the leaking fluid will positively identify the source of the leak.

If the fluid is known to be leaking from the transmission, examine the following areas.

Front end

It will be necessary to remove the bell housing bottom cover and the lower front cover plate in order to examine the transmission for leakage at the front end.

To correct a leak at the front end, the transmission will have to be removed from the car.

1. If the **pump oil seal** is suspected of leaking fluid, ensure that the seal has been correctly fitted and is not damaged.

When fitting a new seal (*see Section T19*) ensure that the seal bore in the case is clean and that the seal garter spring is fitted. Examine the finish on the converter neck and the bearing surface in the pump body.

2. Examine the **pump square-sectioned 'O' ring** and the **gasket for damage,** renew if necessary.
3. Ensure that the **rubber coated washers** on the pump securing setscrews are correctly fitted and are not damaged.
4. Examine the **torque converter** for leakage (*see Section T10*).

Rear extension

1. Examine for damage the **rear extension lip-type seal.**
2. Examine the finish on the **sliding coupling.**
3. Ensure that the **square-sectioned 'O' ring** at the front of the rear extension has been correctly fitted and is not damaged.

Note On later transmissions, the 'O' ring is superseded by a **gasket,** fitted between the joint faces.

4. Check the **securing setscrews** for correct torque tightness.
5. Examine the **housing** for cracks or porosity.

Transmission case

1. Examine the speedometer drive **'O' ring** and **lip-type seal.** Ensure that the securing **setscrew** is torque tightened.
2. Examine the **governor cover gasket.** Ensure that the **setscrews** are torque tightened.
3. Examine for damage the **detent** and **stator** (if fitted) **connector 'O' ring.**
4. Examine for damage the **parking pawl shaft 'O' ring.**
5. Examine for damage the **manual shaft 'O' ring.**
6. Examine for damage the **vacuum modulator 'O' ring.** Ensure that the retaining **setscrew** is torque tightened.
7. Examine the **vacuum modulator** for possible damage to the **diaphragm.**

Note If the transmission is found to be consistently low on fluid, check the modulator to make certain that there is no split in the diaphragm. Apply suction to the vacuum tube and check for leaks. A split diaphragm would allow transmission fluid to be drawn into the engine induction manifold and vacuum line. This condition can usually be detected because the exhaust will be excessively smokey due to the transmission fluid being added to the combustion mixture.

8. Examine the **sump gasket.** Check the torque tightness of the securing setscrews.
9. Check the torque tightness of the **main line pressure tapping plug.**
10. Examine the **breather pipe** for damage.
11. Ensure that the transmission has not been overfilled.
12. Check for coolant in the transmission fluid.
13. Examine the **case** for cracks or porosity.
14. Ensure that the **pump to case gasket** is not incorrectly positioned.
15. Ensure that foreign material is not between the **pump and case,** or between the **pump cover and body.**
16. Ensure that the breather hole in the **pump cover** is not obstructed.
17. Ensure that the **'O' ring** on the filter assembly is not cut.

Heat exchanger connections

Ensure that the heat exchanger transmission **fluid pipes** are correctly fitted and are not damaged. Ensure that the nuts are tight.

Dipstick and filler tube

Examine the **flared end** of the dipstick and filler tube for cracks or damage. Examine the **spherical seat** in the sump. Ensure that the **sleeve nut** is tightened sufficiently to nip the tube securely to the sump.

Internal leaks

It will be necessary to remove the sump in order to determine the source of internal leaks.

1. Check the **governor pipes** for security and damage.
2. Examine the **rear servo cover gasket** for damage. Ensure that the **square-sectioned 'O' ring** is fitted correctly and is not damaged. Torque tighten the cover securing setscrews.
3. Examine the **control valve unit assembly** and **oil guide plate gaskets.** Check the torque tightness of the unit securing setscrews.
4. Examine the **solenoid gaskets** for damage. Check the torque tightness of the solenoid securing setscrews.
5. Examine the **intake pipe 'O' ring** for damage.
6. Check that the **case valve body mounting face** is not distorted.

Control joints—To lubricate

During initial assembly, the clevis pins in the manual control linkage are lubricated with Rocol MTS 1000 grease and should be similarly treated whenever they are removed.

The emergency (Get-You-Home) lever (fitted to early cars) pivots on an Oilite bush and should not require lubrication.

When a car is being serviced, the opportunity should be taken to check the controls for correct operation and to lubricate all the control joints with a few drops of light oil.

Manual shaft—To lubricate

As part of the normal controls maintenance procedure, it is recommended that the manual shaft be lubricated with a few drops of oil at the point where it enters the transmission case.

If a manual shaft shield is fitted, the shaft should not require lubrication.

Printed in Great Britain
September 1971
T.S.D. 2476

Section T3
TESTING

Before road testing the car to check the functioning of the transmission, carry out the following checks.

1. Check the fluid level and top-up, if necessary.
2. Ensure that the engine and transmission are at normal operating temperature 76·7°C. (170°F.).
3. Ensure that the gearchange actuator is operating satisfactorily.
4. Check the manual linkage and adjust, if necessary (*see Section T5*).
5. Check the operation of the detent switch and adjust, if necessary (*see Section T17*).
6. If the oil pressure is to be checked, fit a gauge. The car can then be road tested, using all the selector ranges. Note when any operating faults occur. Check the gearchange pattern as follows.

Gearchange pattern check

Drive range

1. Select 'D' range, then accelerate the car from standstill.
2. A 1–2 and a 2–3 up-change should occur at all throttle openings.

Note The change points will vary according to throttle opening.

3. As the speed of the car decreases to a stop, the 3–2 and the 2–1 down-changes should occur.

Intermediate range

1. Select 'I' range.
2. Accelerate the car from standstill.
3. A 1–2 up-change should occur at all throttle openings.
4. A 2–3 up-change cannot be obtained in this Range.
5. The 1–2 up-change point will vary according to throttle opening.
6. As the speed of the car decreases to a stop, the 2–1 down-change should occur.

Low range

1. Select 'L' range.
2. No up-change should occur in this Range, regardless of throttle opening.

2nd. gear overrun braking

1. Select 'D' range.
2. When a speed of approximately 35 m.p.h. (56 k.p.h.) has been reached, move the selector lever to the 'I' range position.
3. The transmission should change down to 2nd. gear.
4. An increase in the speed of the engine as well as an engine braking effect should be observed.
5. Line pressure should change from 70 lb/sq.in. (4,9 kg/sq.cm.) to approximately 150 lb/sq.in. (10,5 kg/sq.cm.).

1st. gear—downhill or overrun engine braking

1. Select 'I' range.
2. When the speed of the car is approximately 30 m.p.h. (48 k.p.h.) – not exceeding 40 m.p.h. (64 k.p.h.) – and at constant throttle, move the selector to 'L' range.

3. An increase in engine r.p.m. and a braking effect should be noticed as the down-change occurs.

Oil pressure—To check

Before attempting to check oil pressure or to road test the car, always ensure that the level of fluid in the transmission is correct (*see Section T2 – Servicing*).

The pressure can be checked with the transmission in the car by using an oil pressure gauge coupled to the main line tapping in the left-hand side of the transmission case.

1. Clean any dirt from around the line pressure plug; remove the plug.
2. Fit adapter RH 7914 into the main line tapping; tighten the adapter.
3. Screw a pressure gauge, 0 lb/sq.in. to 300 lb/sq.in. (0 kg/sq.cm. to 21,1 kg/sq.cm.) onto the adapter then position the gauge so that it can be seen from the driver's seat. This can be achieved by removing the carpet from the driver's side then removing the rubber plug from the side of the transmission tunnel. Run the gauge pipe through the hole then couple it to the adapter (*see Fig. T133*). Ensure that the gauge pipe does not interfere with the gear-change linkage.
4. Connect a tachometer to the engine; this will enable the gear change points to be positively identified.
5. Drive the car until the transmission has reached normal operating temperature 76·7°C. (170°F.).

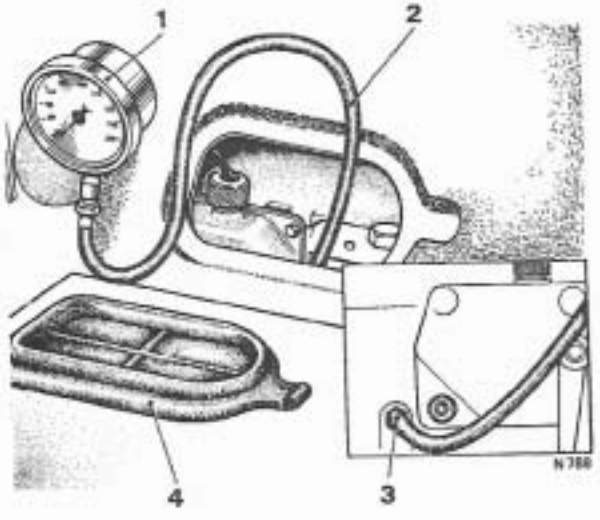

FIG. T133 CHECKING THE OIL PRESSURE

1 Oil pressure gauge
2 Gauge pipe
3 Pipe adapter (RH 7914)
4 Rubber cover

6. Check the fluid level and correct, if necessary.

The following checks may be carried out during road test.

Engine idle pressure check

1. Select 'D' range then drive the car at approximately 30 m.p.h. (48 k.p.h.) with the throttle eased back. The line pressure should be 70 lb/sq.in. (4,9 kg/sq.cm.).
2. Select 'I' range then drive the car to obtain a steady road load, speed 25 m.p.h. (40 k.p.h.). Line pressure should be 150 lb/sq.in. plus or minus 5 lb/sq.in. (10,5 kg/sq.cm. plus or minus 0,35 kg/sq.cm.).

Full throttle pressure check

1. Jack up the rear of the car and suitably position blocks so that the rear wheels are clear of the ground.
2. Disconnect the vacuum line at the induction manifold.
3. Blank off the orifice in the manifold.
4. Run the engine at a fast idle (700 r.p.m. to 1 000 r.p.m.) in Neutral. The oil pressure should be 145 lb/sq.in. (10,2 kg/sq.cm.).
5. Repeat the procedure in Reverse. Reverse pressure should be 150 lb/sq.in. plus or minus 5 lb/sq.in. (10,5 kg/sq.cm. plus or minus 0,35 kg/sq.cm.).
6. Connect the vacuum pipe.

Towing

Cars which are fitted with the Torque Converter Transmission cannot be started by pushing the car.

If the engine cannot be started by the starter motor, the car should be towed to the nearest service station.

If the transmission, propeller shaft, final drive unit and drive-shafts are serviceable, the car may be towed, in Neutral (N) at speeds of up to 35 m.p.h. (56 k.p.h.) for distances of up to 50 miles (80 kilometres).

When higher towing speeds, or extended mileage is necessary, it is recommended that the propeller shaft be disconnected or the rear wheels raised clear of the road.

Before towing, check the fluid level in the transmission. The level must be **above** the 'MAX' mark on the dipstick when the engine is **not running.** The car must always be towed with the transmission in Neutral.

If it is necessary to raise either the front or the rear part of the car when towing, the wheels should be raised so that they just clear the ground. When towing with the rear wheels raised, secure the steering wheel with the front road wheels in the 'straight ahead' position.

Printed in Great Britain
September 1971
T.S.D. 2476

Section T4
FAULT DIAGNOSIS

Accurate diagnosis of transmission problems begins with a thorough understanding of normal transmission operation. In particular, knowing which units are involved in the various speeds and gears is essential so that the specific unit or fluid flow path can be isolated and investigated further.

The following diagnosis table lists the various diagnosis operations in the sequence in which they are to be performed.

Following the chart will, in most cases, correct the condition without having to remove the transmission from the car.

The instructions must be followed in exact sequence as any deviation will result in incorrect diagnosis.

The following sequence of tests may help to simplify the diagnosis of defects and should be performed first.

1. Check fluid level.
2. Warm up engine and transmission.
3. Check manual controls.
4. Check detent switch.
5. Road test car.

Note If possible, test the car with the Customer as a passenger. It is possible that the condition which the Customer requires correcting is a normal function of the transmission, thus, unnecessary work can be avoided.

DIAGNOSIS

SYMPTOM	POSSIBLE CAUSE	ACTION
1 **No drive in Drive range.**	1 Insufficient fluid in transmission. 2 Car battery flat — actuator inoperative. 3 Manual linkage 4 Incorrect line pressure. 5 (a) **Low** line oil pressure. (b) **Normal** line oil pressure. 6 Pump assembly. 7 Forward clutch. 8 Roller clutch (late cars) Sprag clutch (early cars)	1 Top-up as described on Page T163. 2 Fit new fully charged battery. Also check thermal cut-out in Fusebox. 3 Check and adjust the manual linkage as described on Page T183. 4 With brakes applied, check line oil pressure (*see Fig. T133*). 5 (a) Check items as listed under 'Low line pressure—Page T177'. (b) Check items 6–8 inclusive. 6 Check forward clutch feed passage for restriction. 7 Check items as listed under 'Burned forward clutch — Page T178'. 8 Check clutch assembly for damage or incorrect installation.
2 (a) **No drive in Reverse range.** (b) **Slips in Reverse range.**	1 Insufficient fluid in transmission. 2 Actuator inoperative. 3 Manual linkage. 4 Incorrect line oil pressure.	1 Top-up as described on Page T163. 2 (a) Check operation of actuator as described in Section T7. (b) Check charge condition of battery. 3 Check and adjust the manual linkage as described on Page T183. 4 With brakes applied, check line oil pressure (*see Fig. T133*).

SYMPTOM	POSSIBLE CAUSE	ACTION
2 (a) **No drive in Reverse range.** (b) **Slips in Reverse range** —*continued.*	5 (a) Low line oil pressure. (b) Normal line oil pressure. 6 Control valve assembly. 7 Rear servo and accumulator. 8 Forward clutch. 9 Direct clutch. 10 Rear band. 11 Centre support.	5 (a) Check items as listed under 'Low line oil pressure — Page T177'. (b) Check items 6–11 inclusive. 6 (a) Check valve body gaskets are not damaged or incorrectly fitted. (b) Check 2–3 valve train is not sticking open (this condition will also cause a 1–3 up-change in Drive range). 7 (a) Check for damaged rear piston seal. (b) Check for short band apply pin (this condition may also cause no overrun braking or slipping in overrun braking — Low range). (c) Check rear servo piston and bore. 8 Check clutch unit will release (if unit does not release this will also cause drive in Neutral). 9 Check items listed under 'Burned direct clutch — Page T178'. 10 Check the band for burned or loose linings, damaged anchor or apply pins, broken band. 11 Check to ensure oil seal rings or grooves are not damaged or worn.
3 **Drive in Neutral.**	1 Manual linkage. 2 Internal linkage. 3 Pump assembly. 4 Forward clutch.	1 Check and adjust manual linkage as described on Page T183. 2 (a) Manual valve disconnected or broken end. (b) Inside detent lever pin broken. 3 Transmission fluid pressure leaking into forward clutch apply passage. 4 (a) Check items listed under 'Burned forward clutch — Page T178'. (b) Incorrect assembly of forward clutch.
4 (a) **Will not hold in Park.** (b) **Will not release from Park.**	1 Manual linkage. 2 Internal linkage.	1 Check and adjust manual linkage as described on Page T183. 2 (a) Check parking brake lever. (b) Check actuator assembly (check the chamfer on the actuator sleeve rod). (c) Parking pawl broken, chamfer omitted. (d) Parking pawl return spring broken, missing or incorrectly hooked.
5 **No engine braking in Low range — 1st. gear.**	1 Transmission case assembly. 2 Rear servo. 3 Rear band.	1 (a) Low — Reverse check ball mispositioned or missing. (b) Transmission case damaged in area surrounding Low — Reverse check ball. 2 (a) Check servo for damaged oil seal ring, ring bore or piston. (b) Rear band apply pin short. (c) Incorrect assembly of parts. 3 (a) Broken or burned (check for cause). (b) Check assembly engages correctly on anchor pins and/or servo pin.
6 **No engine braking in Intermediate Range — 2nd. gear.**	1 Front servo and accumulator. 2 Front band.	1 (a) Check for leaking or broken oil seal rings. (b) Check for scored bores. (c) Check for sticking servo piston. 2 (a) Check to ensure front band is not burned or broken. (b) Check to ensure front band is engaging correctly on anchor pin and/or servo pin.

SYMPTOM	POSSIBLE CAUSE	ACTION
7 **No detent down-changes.** Note Position car on a suitable ramp. Switch-on ignition but do not start engine.	1 Transmission case electrical plug. 2 (a) **Light off.** (b) **Light on.**	1 (a) Disconnect electrical plug. (b) Connect test-lamp to 'detent terminal' of disconnected wiring harness. (c) Depress accelerator 'fully'. 2 (a) Incorrectly adjusted or faulty micro-switch. Faulty electrical circuit. (b) Check operation of detent solenoid. If solenoid cannot be heard to operate this may be due to (i) Faulty electrical connection. (ii) Sticking detent valve train. (iii) Restricted oil passage.
8 **Noisy transmission.** Note Before checking transmission, ensure that noise is not from coolant pump alternator, air conditioning unit, power steering, etc.	1 Noise in Park, Neutral and all Drive ranges. 2 First, Second and Reverse. 3 During acceleration any gear. 4 Squeak at low vehicle speeds. 5 Clutch application during Neutral-to-Drive and/or Park-to-Drive. 6 1–2 up-change in Intermediate and Drive ranges. 7 2–3 up-change in Drive range, Neutral-to-Reverse and Park-to-Reverse.	1 (a) Pump cavitation. (i) Transmission fluid level low top-up as described on Page T163. (ii) Restricted or incorrect filter assembly. (iii) Intake 'O' ring damaged or intake pipe split. (iv) Transmission case — porosity at pump face intake port. (v) Pump to transmission case gasket not correctly fitted. (vi) Coolant in transmission fluid. (b) Pump assembly. (i) Defective or damaged gears. (ii) Drive gear incorrectly assembled. (iii) Crescent interference. (iv) Orifice cup plug in pressure regulator damaged or missing (buzzing noise). (v) Seal rings damaged or worn. (c) Converter. (i) Damaged converter. (ii) Loose bolts converter to flywheel. 2 (a) Planetary gear train. (i) Gears or thrust bearings damaged. Thoroughly clean thrust bearings and thrust races. Closely inspect needles and surfaces for pitting and roughness. (ii) Front internal gear ring damaged. 3 (a) Check coolant or transmission fluid lines to and from cooler are not fouling. (b) Check engine mounts are not loose or broken. 4 Check speedometer driven gear shaft seal (lubricate or replace). 5 Check condition of forward clutch assembly. 6 Check condition of intermediate clutch plates. 7 Check condition of direct clutch plates.
9 **1st and 2nd speeds only (no 2–3 up-change).**	1 Control valve assembly.	1 (a) Check for sticking 2–3 shift valve train (valves should fall under their own weight). (b) Check for damaged or incorrectly fitted gaskets between the control valve unit, oil guide plate and case.

Printed in Great Britain

September 1971

T.S.D. 2476

SYMPTOM	POSSIBLE CAUSE	ACTION
9 **1st and 2nd speeds only (no 2-3 up-change)** — *continued*	2 Direct clutch. 3 Incorrect vacuum.	2 Check items listed under 'Burned direct clutch — Page T178'. 3 Check items listed under 'Incorrect vacuum at modulator — Page T177'.
10 (a) **No 1-2 up-change** (b) **Delayed up-change.**	1 Insufficient fluid in transmission. 2 Transmission case electrical plug.	1 Top-up as described on Page T163. 2 Disconnect electrical plug and road test car.
	3 (a) **Normal** up-change occurs.	3 (a) (i) Check for short circuit, correct detent switch and wiring. (ii) Check for solenoid click.
	(b) **No** up-change occurs.	(b) Check line pressure at 1 000 r.p.m. in Drive range.
	4 (a) Pressure 60 to 90 lb/sq.in. (4,2 to 6,3 kg/sq.cm.) see test 3(b).	4 (a) Control valve assembly. (i) Check for sticking 2-3 shift valve train (valves should fall under their own weight). (ii) Check for damaged or incorrectly fitted gaskets between control valve unit, oil guide plate and case.
	4 (b) Pressure 90 to 150 lb/sq.in. (6,3 to 10,5 kg/sq.cm.) see test 3(b).	4 (b) Check line pressure at 1 000 r.p.m. in Neutral.
	5 (a) Pressure 55 to 70 lb/sq.in. (3,8 to 4,9 kg/sq.cm.) see test 4(b).	5 (a) (i) Check detent system. (ii) Check solenoid for operation and damage. (iii) Check 'line - to - detent' orifice in spacer plate. (iv) Check detent valve train.
	(b) Pressure 70 to 160 lb/sq.in. (4,9 to 11,2 kg/sq.cm.) see test 4(b).	(b) (i) Check for vacuum leaks or no vacuum as described on Page T177. (ii) Check vacuum modulator for leaking diaphragm or bent neck see Page T179. (iii) Check vacuum modulator valve is free to operate. (iv) Check transmission case for damage or porosity at modulator valve.
	6 Intermediate clutch.	6 Ensure intermediate clutch seals are sealing correctly (if transmission is dismantled for complaint of 'no 2nd gear' or 'transmission changes 1-3', always fit new inner and outer clutch piston seals).
11 **Rough 1-2 up-change.**	1 Insufficient fluid in transmission.	1 Top-up fluid as described on Page T163.
	2 Check condition of engine.	2 Tune engine.
	3 Vacuum line and components.	3 (i) Check vacuum as described on Page T177. (ii) Check vacuum modulator for leaking diaphragm or bent neck see Page T179. (iii) Check vacuum modulator valve is free to operate. (iv) Check 'feel' of up-change.
	4 Line oil pressure.	4 Check line pressure in 'Drive' at 1 000 r.p.m.
	5 (a) **High** line pressure.	5 (a) Check causes of high line pressure (*see Page T176*).

SYMPTOM	POSSIBLE CAUSE	ACTION
11 **Rough 1–2 up-change** — *continued.*	5 (b) **Normal** line pressure.	5 (b) (i) Remove control valve assembly and solenoid. Check 1–2 accumulator system in control valve assembly. (ii) Check rear accumulator for sticking piston or leaks. (iii) Check rear accumulator feed restricted in transmission case. (iv) Check for correct number and location of check balls (*see Fig. T216*).
	6 Intermediate clutch.	6 (i) Check intermediate clutch, if 'burnt' check cause (*see Page T178*). (ii) Check correct number and type of plates.
12 **Slipping 1–2 up-change.**	1 Insufficient fluid in transmission.	1 Top-up fluid as described on Page T163.
	2 Check condition of engine.	2 Tune engine.
	3 Vacuum line and components.	3 Check vacuum system for response at modulator. Oil pressure should vary and respond rapidly to quick changes in throttle openings.
	4 (a) **Poor** response at modulator.	4 (a) (i) Check vacuum feed, including carburetter for restriction. (ii) Check modulator assembly (*see Page T179*).
	(b) **Normal** response at modulator.	(b) Check line pressure in 'Drive' at 1 000 r.p.m.
	5 (a) **Low** line oil pressure.	5 (a) Check causes of Low line pressure (*see Page T177*).
	(b) **Normal** line oil pressure.	(b) (i) Check control valve assembly bolt torque. (ii) Remove control valve assembly and detent solenoid. (iii) Check spacer plate for blocked orifice. (iv) Check for damaged rear servo piston or oil seal ring. (v) Check rear accumulator piston, rings and case bore. (vi) Check 1–2 accumulator valve system. Check front accumulator piston and oil rings. (vii) Check centre support bolt torque and support for looseness.
	6 Intermediate clutch.	6 Air check intermediate clutch for leakage at seals.
	7 (a) **Excessive** leakage.	7 (a) Remove and inspect intermediate clutch and centre support — check case to support face. If plates are 'burnt' check cause (*see Page T178*).
	(b) **Normal** leakage.	(b) Check intermediate clutch for correct components, correct number of release springs or 'cocked' release spring. Check intermediate clutch piston for flatness.
13 **Rough 2–3 up-change.**	1 Insufficient fluid in transmission.	1 Top-up fluid as described on Page T163.
	2 Check condition of engine.	2 Tune engine.
	3 Check line pressure.	3 With brakes applied check line pressure in 'Drive' at 1 000 r.p.m.
	4 (a) **High** line oil pressure.	4 (a) Check cause of high line oil pressure (*see Page T176*).

Printed in Great Britain

September 1971

T.S.D. 2476

SYMPTOM	POSSIBLE CAUSE	ACTION
13 **Rough 2–3 up-change** *— continued.*	4 (b) **Normal** line oil pressure.	4 (b) Remove control valve assembly. (i) Check front accumulator for sticking piston, also for broken or missing spring. (ii) Check control valve assembly for drilling to accumulator.
	5 Direct clutch.	5 (a) Check direct clutch for leakage to outer area of clutch piston (leak could be at centre piston seal — 2nd ring on centre support). (b) Damaged centre support.
14 **Slipping 2–3 up-change.**	1 Insufficient fluid in transmission.	1 Top-up fluid as described on Page T00.
	2 Check condition of engine.	2 Tune engine.
	3 Check line oil pressure.	3 With brakes applied check line oil pressure in Drive at 1 000 r.p.m.
	4 (a) **Low** line oil pressure. (b) **Normal** line oil pressure.	4 (a) Check cause of Low line oil pressure (*see Page T177*). (b) Remove control valve assembly. (i) Check spacer plate for damage, blocked direct clutch feed orifice or mispositioned gasket. (ii) Check for damaged or leaking oil passages. (iii) Check for sticking valves.
	5 Front Servo.	5 (a) Check for broken or missing front servo spring. (b) Check for leak at servo pin.
	6 Direct clutch.	6 (a) (i) Air check direct clutch for excessive leak. (ii) Remove transmission, inspect for case to centre support leak. (iii) Broken or undersize oil rings. (iv) Damaged or missing piston seals. (b) Remove transmission and inspect direct clutch for correct number and type of clutch plates.
15 (a) **Delayed up-changes.** (b) **No up-changes.**	1 Detent system (full throttle) micro-switch.	1 Disconnect the Green/White wire from connection on side of transmission. Test up-changes. (a) If up-changes occur, problem is in micro-switch or wiring. (b) If fault persists continue to Operation 2.
	2 Incorrect modulator vacuum.	2 Connect gauge to lower end of vacuum modulator pipe. Check for normal vacuum. (a) If vacuum is low or not present, check for leaks and restrictions. (b) If fault persists continue to Operation 3.
	3 Incorrect line pressure.	3 Connect gauge to transmission and check 'Line pressure' in 'Drive' range with engine speed of 1 000 r.p.m. Normal pressure is between 65 lb/sq.in. and 75 lb/sq.in. (4,57 kg/sq.cm. and 5,27 kg/sq.cm. **Note** Normal Line pressure in 'Drive' range with car stationary should vary from approx. 65 lb/sq.in. (4,57 kg/sq.cm.) at idle speed to 150 lb/sq.in. (10,55 kg/sq.cm.) at full throttle. The pressure increases as engine vacuum decreases.

Printed in Great Britain

September 1971

T.S.D. 2476

SYMPTOM	POSSIBLE CAUSE	ACTION
15 (a) **Delayed up-change.** (b) **No up-changes** *— continued.*	4 Line pressure 95 lb/sq.in. to 110 lb/sq.in. (6,68 kg/sq.cm. to 7,73 kg/sq.cm.). 5 Line pressure 135 lb/sq.in. to 150 lb/sq.in. (9,49 kg/sq.cm. to 10,55 kg/sq.cm.). 6 Normal Line pressure 65 lb/sq.in. to 75 lb/sq.in. (4,57 kg/sq.cm. to 5,27 kg/sq.cm.). 7 Detent system.	4 Check complete detent system. 5 With good vacuum at modulator check. (a) Modulator valve. (b) Pressure regulator components. 6 Remove governor assembly; check for freedom of operation and presence of dirt. Clean if necessary. Check bleed orifice in centre of governor valve is not blocked. 7 (a) Detent solenoid loose or defective. (b) Solenoid feed orifice blocked. This is the 0·034 in. (0,86 mm.) dia. hole in the valve body spacer plate, nearest to the detent solenoid. (An incorrectly fitted gasket could block the hole). (c) Detent valve spacer pin either short or missing. The pin should be 1·221 in. to 1·215 in. (31,01 mm. to 30,86 mm.) in length. (d) Detent valve bore plug pushed too far and tilted. The plug should be seated against the retaining pin. (e) Detent valve bore plug undersize or eccentric, causing an excessive leak at the detent valve.
16 **Torque Converter Leaks.**	1 Converter welding. 2 Damaged or worn converter hub.	1 (a) Carry out converter leak check (*see Page T229 — Torque Converter — To Leak test*). (b) Fit new converter if unit is leaking. 2 (a) Closely inspect converter hub for wear and scoring that can damage seal. (b) Repair converter hub with crocus cloth if practical, or fit new components.
17 **Torque Converter Vibrations**	1 Converter/Flex-plate out of balance. 2 Converter balance weight. 3 Crankshaft pilot.	1 (a) Isolate cause of vibration. (b) Change position of converter on flex-plate 120° at a time to cancel out engine/converter out of balance condition. 2 (a) Check converter for loss of balance weight. (b) Change converter if balance weight is lost. 3 (a) Check to ensure converter to crankshaft pilot is not broken. (b) Change converter if pilot is broken.
18 **Torque Converter Noisy or Slips.** (Most converter noise occurs under light throttle in 'Drive' with brakes applied).	1 Loose flex-plate to converter bolts. 2 Cracked flex-plate. 3 Items listed under Operation 17 — Torque Converter Vibrations. 4 Internal damage to converter.	1 (a) Check flex-plate and converter for damage. (b) If **no damage** is apparent, tighten bolts. (c) If **damage** is apparent replace components. 2 (a) Check for cracked flex-plate (engine to case dowel pins missing can result in cracked flex-plate). (b) Replace damaged components. 3 Items lists under Operation 17 — Torque Converter Vibrations. 4 (a) Check thrust roller bearing, thrust races and roller clutch for damage. (i) Thrust roller bearing and thrust races can be checked by viewing them when looking into the converter neck or feeling through the opening to

SYMPTOM	POSSIBLE CAUSE	ACTION
18 **Torque Converter Noisy or Slips** — *continued.*		make sure they are not cracked, broken or incorrectly positioned (*see Fig. T171*). Fit a new converter if damage is apparent. (ii) Roller clutch function can be checked by placing a finger into the converter neck and with side pressure against the spline, turn the stator race. The race should turn fairly free in a clockwise direction and not turn in an anti-clockwise direction. Fit a new converter if damage is apparent.
	5 Excessive Torque Converter end clearance.	5 (a) Check Torque Converter end clearance (*see Page T229*). (b) Fit a new converter if end clearance is excessive.
	6 Converter Fluid.	6 (a) Check colour of fluid, if this appears as 'aluminium paint' converter is internally damaged. (b) Check anti-freeze has not contaminated converter fluid. (c) Fit new converter.
	Note Do not change the converter if a failure in some other part of transmission has resulted in converter containing dark discoloured fluid. The full flow filters used in the transmission will remove all harmful residence from failures (other than converter or pump failures) before oil is pumped into converter. Full flow filter fitted to this transmission from late 1967.	Correct transmission problem, change fluid and filter.

High line pressure

If either the idle or full throttle pressure checks is high, the cause may be as follows.

1. **Vacuum leak**
   - a Full leak (vacuum line disconnected).
   - b Partial leak in line from engine modulator.
   - c Incorrect engine vacuum.
   - d Leak in vacuum operated accessories.

2. **Damaged Modulator**
   - a Sticking valve.
   - b Water in modulator.
   - c Incorrect operation of modulator (*See Page T231 — Section T11*).

3. **Detent System**
   - a Detent switch actuated (plunger sticking) or shorted.
   - b Detent wiring shorted.
   - c Detent solenoid stuck open.
   - d Detent feed orifice in spacer plate blocked.
   - e Detent solenoid loose.
   - f Detent valve bore plug damaged.
   - g Detent regulator valve pin short.

4. **Pump**
   - a Pressure regulator and/or boost valve stuck.
   - b Incorrect pressure regulator spring.
   - c Excessive number of pressure regulator valve spacers.
   - d Faulty pump casting.
   - e Pressure boost valve installed incorrectly or otherwise defective.
   - f Aluminium bore plug defective.
   - g Pressure boost bush defective.

5. **Control valve assembly**
   - a Spacer plate-to-case gasket incorrectly fitted.
   - b Incorrect plate-to-case gasket.

Printed in Great Britain

September 1971

T.S.D. 2476

Low line pressure

If either the idle or full throttle pressure checks is low, the cause may be as follows.

1. **Transmission oil level low.**

2. **Modulator assembly** (*see Fig. T174*).

3. **Filter**
   - a Blocked or restricted.
   - b 'O' ring on intake pipe omitted or damaged.

4. **Split or leaking intake pipe**

5. **Incorrect filter assembly**

6. **Pump**
   - a Pressure regulator or boost valve sticking.
   - b Gear clearance, damaged or worn (pump will become damaged if the drive gear is installed the wrong way or if the converter pilot does not enter the crankshaft freely).
   - c Pressure regulator spring weak.
   - d Insufficient spacers in pressure regulator.
   - e Pump to case gasket incorrectly positioned.
   - f Defective pump body and/or cover.

7. **Leaks in the internal circuit**
   - a Forward clutch leak (pressure normal in Neutral and Reverse — pressure low in Drive).
     - (i) Check pump rings.
     - (ii) Check forward clutch seals.
   - b Direct clutch leak (pressure normal in Neutral), Low, Intermediate and Drive — pressure low in Reverse).
     - (i) Check centre support oil seal rings.
     - (ii) Check direct clutch outer seal for damage.
     - (iii) Check rear servo and front accumulator pistons and rings for damage or missing.

8. **Case assembly**
   - a Porosity in intake bore area.
   - b Check case for intermediate clutch plug leak or blown out.
   - c Low - Reverse check ball incorrectly positioned or missing (this condition will cause no Reverse and no overrun braking in Low range).

Note When checking item 3 — Filter it should be noted that there is no approved method for either checking or cleaning the filter. If the performance of the filter is suspect a **new** filter must be fitted.

Improper vacuum at modulator

1. **Engine**
   - a Requires tune-up.
   - b Loose vacuum fittings.
   - c Vacuum operated accessory leak.

2. **Vacuum line to modulator**
   - a Leak.
   - b Loose fitting.
   - c Restricted orifice, or incorrect orifice size.
   - d Carbon build-up at modulator vacuum fitting.
   - e Pinched line.
   - f Grease or varnish material in pipe (no or delayed upchange – cold).

Oil leaks

1. **Transmission oil sump leaks**
   - a Securing bolts not correctly torque tightened.
   - b Improperly installed or damaged sump gasket.
   - c Oil sump gasket mounting face not flat.

2. **Case extension leak**
   - a Securing bolts not correctly torque tightened.
   - b Rear seal assembly damaged or incorrectly installed.
   - c Gasket (extension to case) damaged or incorrectly installed.
   - d Porous casting.
   - e Output shaft 'O' ring damaged.

3. **Case leak**
   - a Filler pipe 'O' ring damaged or missing; mispositioned filler pipe bracket to engine 'loading' one side of the 'O' ring.
   - b Modulator assembly 'O' ring damaged or incorrectly installed.
   - c Connector 'O' ring damaged or incorrectly installed.
   - d Governor cover, gasket and bolts damaged or loose; case face leak.
   - e Damaged or porosity. Leak at speedometer driven gear housing or seal. Leak at speedometer hole plug.
   - f Manual shaft seal damaged or incorrectly installed.
   - g Line pressure tap plug stripped.
   - h Vent pipe (*refer to Item 5*).
   - i Porous case or crack at pressure plug boss.

4. **Front end leak**
   - a Front seal damaged (check converter neck for nicks, etc., also for pump bushing moved forward), garter spring missing.

b Pump securing bolts and seals damaged; bolts missing or loose.
c Converter (leak in weld).
d Pump 'O' ring seal damaged (Also check pump oil ring groove and case bore).
e Porous casting (pump or case).
f Pump drain back hole not open.

5. **Oil comes out vent pipe**
   a Transmission over-filled.
   b Water in oil.
   c Filter 'O' ring damaged or incorrectly assembled causing oil to foam.
   d Foreign material between pump and case or between pump cover and body.
   e Case porous, pump face incorrectly machined.
   f Pump porous.
   g Pump to case gasket mispositioned.
   h Pump breather hole blocked or missing.
   i Hole in intake pipe.

6. **Modulator Assembly**
   a Diaphragm defective.

Control valve assembly—Governor line pressure check

1. Install line pressure gauge.
2. Disconnect vacuum line to modulator.
3. With car on hoist (rear wheels off ground), foot off brake, in Drive, check line pressure at 1 000 r.p.m.
4. Slowly increase engine revolutions to 3 000 r.p.m. and determine if a line drop occurs of 7 lb/sq. in. (0,49 kg/sq. cm.) or more.
5. If pressure drop occurs, dismantle, clean and inspect control valve assembly.
6. If no pressure drop occurs:
   a Inspect governor.
      (i) Sticking valve.
      (ii) Weight freeness.
      (iii) Restricted orifice in governor valve.
   b Governor feed system.
      (i) Check screen in governor feed pipe hole in case assembly.
      (ii) Check for restrictions in governor pipe.

Burned clutch plates

Note Burned clutch plates can be caused by incorrect usage of clutch plates. Also, anti-freeze in transmission fluid can cause severe damage, such as large pieces of composition clutch plate material peeling off.

1. **Forward clutch**
   a Check ball in clutch housing for damage, sticking or missing.
   b Clutch piston cracked, seals damaged or missing.
   c Low line pressure.
   d Manual valve mispositioned.
   e Restricted oil feed to forward clutch. (Clutch housing to inner and outer areas not drilled, restricted or porosity in pump).
   f Pump cover oil seal rings missing, broken or undersize; ring groove oversize.
   g Case valve body face not flat or porosity between channels.
   h Manual valve bent and centre land not ground properly.

2. **Intermediate clutch**
   a Rear accumulator piston oil ring, damaged or missing.
   b 1–2 accumulator valve sticking in control valve assembly.
   c Intermediate clutch piston seals damaged or missing.
   d Centre support bolt loose.
   e Low line pressure.
   f Intermediate clutch plug in case missing.
   g Case valve body face not flat or porosity between channels.
   h Manual valve bent and centre land not ground properly.

3. **Direct clutch**
   a Restricted orifice in vacuum line to modulator (poor vacuum response).
   b Check ball in direct clutch piston damaged, sticking or missing.
   c Defective modulator bellows.
   d Centre support bolt loose (Bolt may be tight in support but not holding support tight to case).
   e Centre support oil rings or grooves damaged or missing.
   f Clutch piston seals damaged or missing.
   g Front and rear servo pistons and seals damaged.
   h Manual valve bent and centre land not cleaned up.
   i Case valve body face not flat or porosity between channels.
   j Intermediate roller clutch installed backwards.
   k 3–2 valve, 3–2 spring or 3–2 spacer pin installed in wrong location in 3–2 valve bore.

Note If direct clutch plates and front band are burned, check manual linkage.

Printed in Great Britain
September 1971
T.S.D. 2476

Vacuum modulator assembly

The following procedure is recommended for checking modulator assemblies in service before replacement is undertaken.

1. **Vacuum Diaphragm Leak Check.** Insert a pipe cleaner into the vacuum connector pipe as far as possible and check for the presence of transmission oil. If oil is found, replace the modulator.

   Note Petrol or water vapour may settle in the vacuum side of the modulator. If this is found **without** the presence of oil, the modulator should **not** be changed.

2. **Atmospheric Leak Check.** Apply a liberal coating of soap bubble solution to the vacuum connector pipe seam, the crimped upper to lower housing seam, and the threaded screw seal. Using a short piece of rubber tubing, apply air pressure to the vacuum pipe by blowing into the tube and observe for leak bubbles. If bubbles appear, replace the modulator.

   Note Do not use any method other than human lung power for applying air pressure, as pressures over 6 lb/sq. in. (0,42 kg/sq. cm.) may damage the modulator.

3. **Bellows Comparison Check.** Make a comparison gauge (*see Fig. T134*), and compare the load of a known good modulator with the assembly in question.
   a Install the modulator that is known to be acceptable on either end of the gauge.
   b Install the modulator in question on the opposite end of the gauge.
   c Holding the modulators in a horizontal position, bring them together under pressure until either modulator sleeve end just touches the line in the centre of the gauge. The gap between the opposite modulator sleeve end and the gauge line should then be 0·0625 in. (1,59 mm.) or less. If the distance is greater than this amount the modulator in question should be replaced.

4. **Sleeve Alignment Check.** Roll the main body of the modulator on a flat surface and observe the sleeve for concentricity to the body. If the sleeve is concentric and the plunger is free, the modulator is acceptable. Once the modulator assembly passes all of the above tests, it is an acceptable part and should be fitted again.

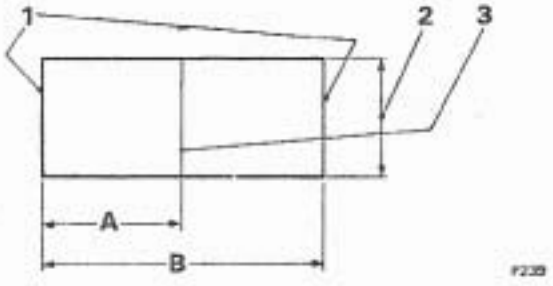

FIG. T134 COMPARISON GAUGE

1 Ends to be square within 1/64 in. (0,397 mm.)
2 Round or flat bar between 13/32 in. (10,32 mm.) and 3/8 in. (9,5 mm.) in width
3 Scribed centre line
A 1/2 in. (12,7 mm.)
B 1·0 in. (25,4 mm.)

Down-change solenoid circuit—To check

Note Before checking the down-change solenoid circuit, make certain that the transmission down-change switch is properly adjusted as described in Operation 5.

1. With the transmission gear range selector lever in Park, turn the ignition switch to the 'ON' position but do not start the engine. Leave the ignition switch 'ON' throughout the checking procedure.

2. Working under the bonnet slowly advance the throttle linkage to the full throttle position. One click should be heard from the transmission.

3. Allow the throttle to return to the closed position. One click should be heard from the transmission.

4. If the system performed as described above, the down-change circuit is operating properly. If the system does not perform as described above, proceed to Operation 5.

5. Disconnect the Green/White wire from the connection on the side of the transmission case, fit a test lamp into the circuit between the Green/White wire and the connection on the side of the transmission case, ensure that the test lamp bulb lights when the throttle linkage is in the full throttle position. The bulb should extinguish when the throttle is released.

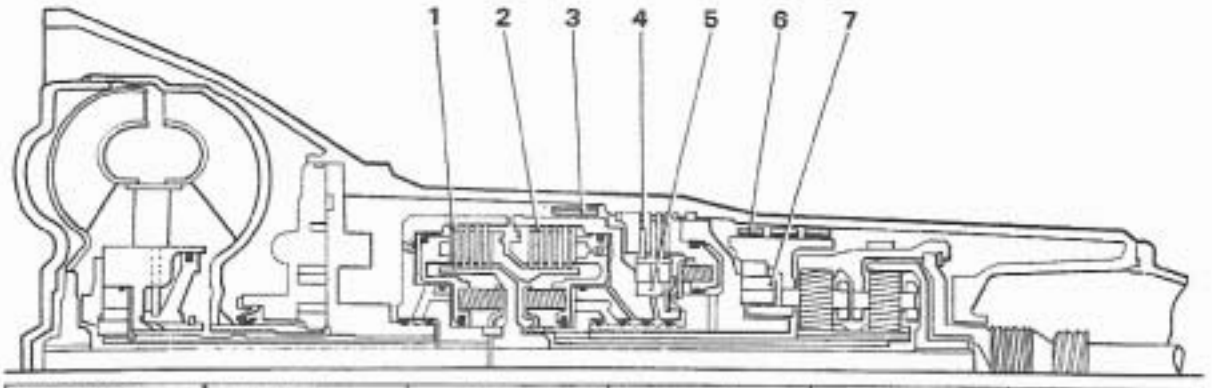

SELECTOR POSITION	Park–Neut:	Drive 1	Drive 2	Drive 3	Intermediate 1	Intermediate 2	Lo 1	Lo 2	Reverse
PUMP PRESSURE	70–160	70–160	70–160	70–160	175	175	175	175	100 – 230
FORWARD CLUTCH	OFF	ON	ON	ON	ON	ON	ON	ON	OFF
DIRECT CLUTCH	OFF	OFF	OFF	ON	OFF	OFF	OFF	OFF	ON
2nd OVERRUN BAND	OFF	OFF	OFF	OFF	OFF	ON	OFF	ON	OFF
INT: CLUTCH	OFF	OFF	ON	ON	OFF	ON	OFF	ON	OFF
INT: SPRAG	OFF	OFF	ON	OFF	OFF	ON	OFF	ON	OFF
REAR SPRAG	OFF	ON	OFF	OFF	ON	OFF	ON	OFF	OFF
REVERSE BAND	OFF	OFF	OFF	OFF	OFF	OFF	ON	OFF	ON

P130

FIG. T135 BAND, ROLLER CLUTCH AND CLUTCH APPLICATION CHART

1 Forward clutch
2 Direct clutch
3 Second overrun (front) band
4 Intermediate clutch
5 Intermediate sprag or roller clutch
6 Reverse (rear) band
7 Rear sprag or roller clutch

a If the system operates as described above, but did not perform properly during Operations 1–3, replace solenoid after first checking to see that the internal wiring is operational.
b If the test lamp bulb fails to light with the throttle in the wide open position, the circuit is open, proceed to Operation 6.
c If the test lamp bulb lights with the throttle closed, the circuit is shorted, proceed to Operation 9.

6. Remove the Green/White wire from the transmission down-change switch. Connect the test lamp between the switch terminal and earth; at full throttle ensure that the bulb of the test lamp lights.
   a If the test lamp bulb lights, replace electrical wire. Re-check system.
   b If the test lamp bulb fails to light, proceed to Operation 7.

7. Check the White feed wire at the transmission down-change switch with test lamp.
   a If the test lamp bulb lights, replace transmission down-change switch. Re-check system.
   b If the test lamp fails to light, proceed to Operation 8.

Printed in Great Britain

September 1971

T.S.D. 2476

8. Check the transmission thermal cut-out on the fuse panel.
   a If necessary to replace the cut-out, re-check system.
   b If the cut-out is correct it will be necessary to locate the fault in the wiring. Test for circuit continuity from the White feed wire at the down-change switch to the battery.
9. Remove the Green/White wire at transmission down-change switch. Use the test lamp to check from the bare terminal at the switch with throttle closed.
   a If the test lamp bulb fails to light, system is correct.
   b If the test lamp bulb lights, proceed to Operation 10.
10. With the throttle in the closed position, check the White feed wire at transmission down-change switch.
   a If the test lamp bulb lights, replace transmission down-change switch. Re-check system.
   b If the test lamp bulb fails to light, it will be necessary to locate the short in the wiring. Test the circuit from the White feed wire at down-change switch to the battery.

Type AA Clutch Parts

Clutch	No. of Flat Steel Clutch Plates	No. of Waved Steel Clutch Plates
Forward Clutch	*4	1
Direct Clutch	*5	1
Intermediate Clutch	2	1

* Steel Plate Thickness 0·0915 in. (2,323 mm.)

Clutch	No. of Clutch Composition Plates	No. of Piston Release Springs
Forward Clutch	5	16
Direct Clutch	6	16
Intermediate Clutch	3	6

For additional information in diagnosing the faults which may occur in a Torque Converter Transmission, a chart showing the application of bands and clutches in the various drive ranges is shown in Figure T135. Transmission fluid passages are shown in Figures T136 and T137.

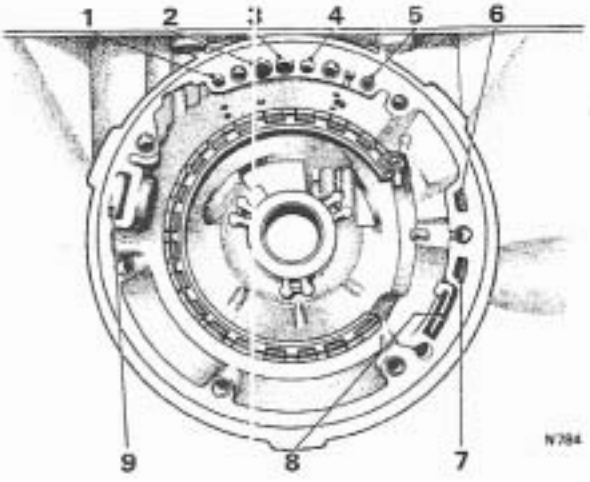

FIG. T136 TRANSMISSION CASE FLUID PASSAGES—FRONT VIEW

1 Reverse
2 Line
3 Drive
4 Modulator
5 Stator signal (early cars only)
6 To heat exchanger
7 From heat exchanger
8 Vent
9 Pump intake

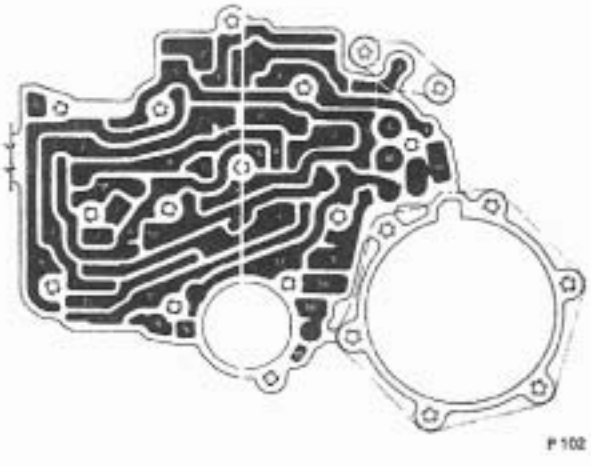

FIG. T137 TRANSMISSION CASE FLUID PASSAGES—BOTTOM VIEW

1 Intermediate oil
2 Exhaust
3 Line pressure oil
4 Lo oil
5 Reverse oil
6 Detent oil
7 Modulator oil
8 Drive range oil
9 Servo oil
10 Intermediate clutch oil
11 Reverse/Lo oil
12 Modulator/intermediate oil
13 Direct clutch oil
14 1-2 accumulator oil
15 Governer oil

Printed in Great Britain
September 1971
T.S.D. 2476

Section T5
CONTROL LINKAGE

It is recommended that the controls be checked before a car is road tested. If any symptoms exhibited during a road test are shown by fault diagnosis to be attributable to controls, another check should be made before proceeding further.

Before altering transmission controls, ensure that the engine controls (throttle and choke) have been correctly adjusted and are operating freely.

Manual linkage—To adjust

1. Remove the split pin and clevis pin from the gearchange operating rod at the actuator end.
2. Select 'P' on the selector. Push the lower end of the gearchange lever fully forward ('P' position).
3. Connect the gearchange operating rod; fit the clevis pin but not the split pin.
4. Measure the gap between the neutral start and height switch lever and the adjacent pillar; the gap should measure 0·050 in. (1,27 mm.). If necessary adjust the jaw to obtain the required gap. Ensure that there is still clearance when the 3° overrun on the actuator, beyond the Park position, is used up.
5. Select 'L' on the actuator then select 'P'. Adjust the operating rod so that the clevis pin will slide into the jaw and through the lever.
6. Select each of the gear positions in turn, and at each position, ensure that the clevis pin will slide easily into the jaw.
7. Again, check that the pin will slide easily into the jaw when 'L' is selected after 'P' and when 'P' is selected immediately after 'L'.

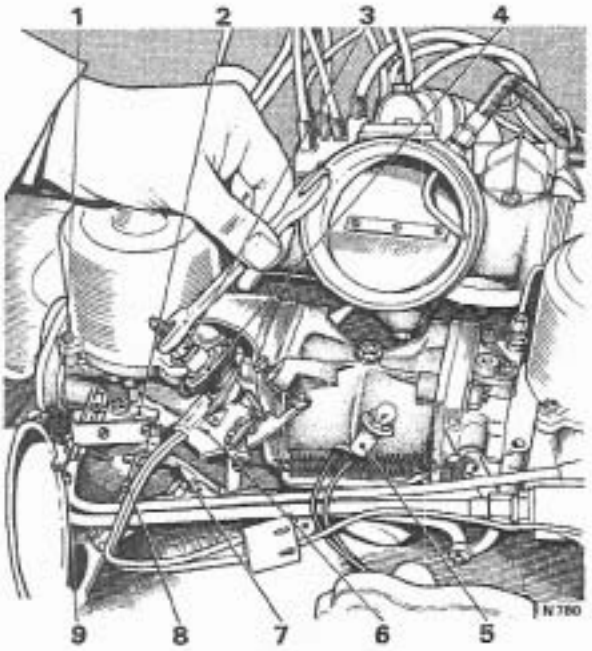

FIG. T138 ADJUSTING THE DAMPER AND SWITCH (EARLY CARS)

1 Throttle stop screw
2 Stator solenoid switch
3 Adjusting nut
4 Throttle damper
5 Test lamp
6 Stator solenoid switch (closed throttle)
7 Stator solenoid switch actuating cam
8 Detent solenoid switch
9 Detent solenoid micro-switch

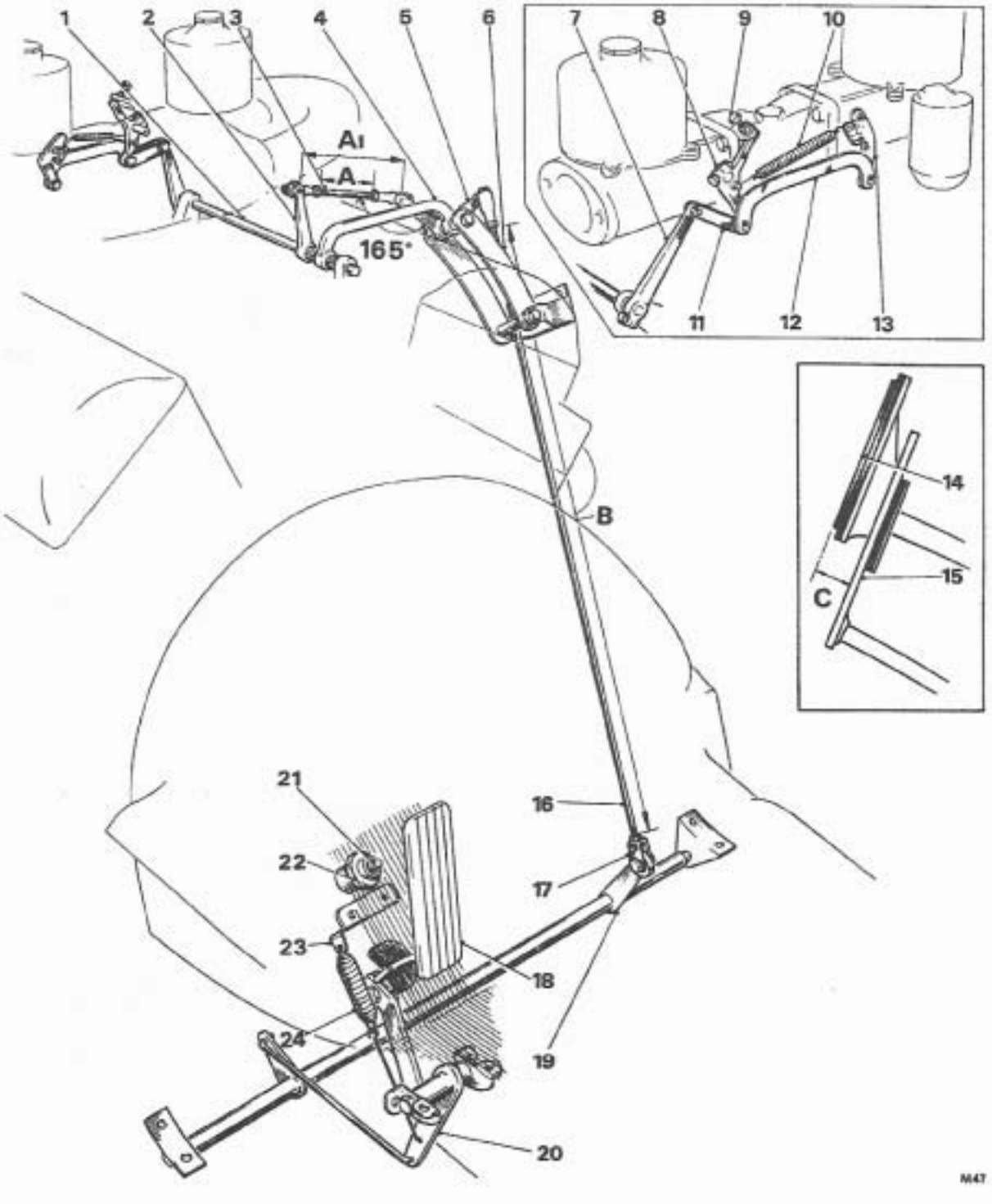

FIG. T139 THROTTLE CONTROL LINKAGE—EARLY LH DRIVE CARS

Printed in Great Britain

FIG. T139 THROTTLE CONTROL LINKAGE—EARLY LH DRIVE CARS

A1 = 4·125 in. (10,478 cm.)
A = 2·175 in. (5,526 cm.)
B = 22·0 in. (55,88 cm.)
C = 0·250 in. to 0·500 in. (0,63 cm. to 1,27 cm.)
1 'A' Bank control shaft
2 Lever — 'A' Bank control shaft to control rod
3 Control rod — 'A' Bank manifold lever to fulcrum lever
4 Tie-rod
5 Fulcrum lever
6 Compensator link
7 Lever — manifold to carburetter
8 Throttle lever — 'A' Bank
9 Slow running throttle stop screw
10 Return spring
11 Coupling link (one link elongated when refrigeration is fitted)
12 Coupling link
13 Throttle lever — 'B' Bank
14 Brake pedal
15 Accelerator pedal
16 Control rod — accelerator to compensator linkage
17 Jaw
18 Accelerator pedal
19 Lever — accelerator pedal cross-shaft
20 Accelerator pedal lever
21 Kick-down button
22 Lock-nut
23 Bracket
24 Pull-off spring

8. If, in any position, the pin will not pass through the jaw and lever, adjust the length of the rod and use up the elongated hole in the jaw.

9. Finally, lubricate the clevis pin, fit the pin and secure it with a new split pin.

Neutral start and height control switches—To adjust

The neutral start and height control switches are housed in an aluminium case, fitted to the left-hand side of the transmission. The switches are actuated whenever Neutral or Park is selected. This enables the engine to be started either in Neutral or Park and also sets the height control to **fast** levelling.

To adjust the switches, proceed as follows.

1. Disconnect the white and red lead at the starter relay. The relay is fitted to the compensating linkage bracket at the rear of the engine compartment, at the right-hand side.

2. Unclip the rubber retainer then remove the left-hand valance plug from the socket. The plug and socket are secured to the valance, directly below the hydraulic system reservoir.

3. Connect a lamp and battery between the White/red lead and the White/black lead in the plug.

4. When either Neutral or Park is selected, the lamp should light.

5. Select Reverse and Drive. Ensure that the lamp does not light in either of these positions.

6. If necessary, adjust the switch actuating rod to obtain the correct lever position. Ensure that the 0·050 in. (1,27 mm.) clearance is maintained between the lever and the pedestal.

7. Remove the lamp and battery then connect the leads.

Accelerator pedal linkage—To adjust

Refer to Chapter K.

Transmission control switches

Initial production cars

Refer to this section.

Cars prior to Car Serial Number SRH 8742

Refer to Chapter K.

Cars from Car Serial Number SRH 8742 and onwards

Refer to Chapter K.

Initial production cars

The stator and detent solenoids in the transmission are actuated by three micro-switches which are in turn actuated by the engine throttle controls.

The damper and micro-switch assembly signals a change in stator blade angle. High angle is signalled when the throttle is closed and low angle is signalled when the throttles are just off the closed throttle stop.

The damper part of the assembly ensures that the throttles close slowly over the last few degrees of travel.

A second micro-switch actuates the stator solenoid also. This switch is operated by a cam on the manifold shaft lever and re-introduces the stator blade high angle at approximately 45 degrees of throttle opening.

The third micro-switch actuates the detent solenoid. This switch is operated at nearly full throttle by the 2 B.A. setscrew in the manifold shaft lever and signals a kick-down gearchange.

September 1971

T.S.D. 2476

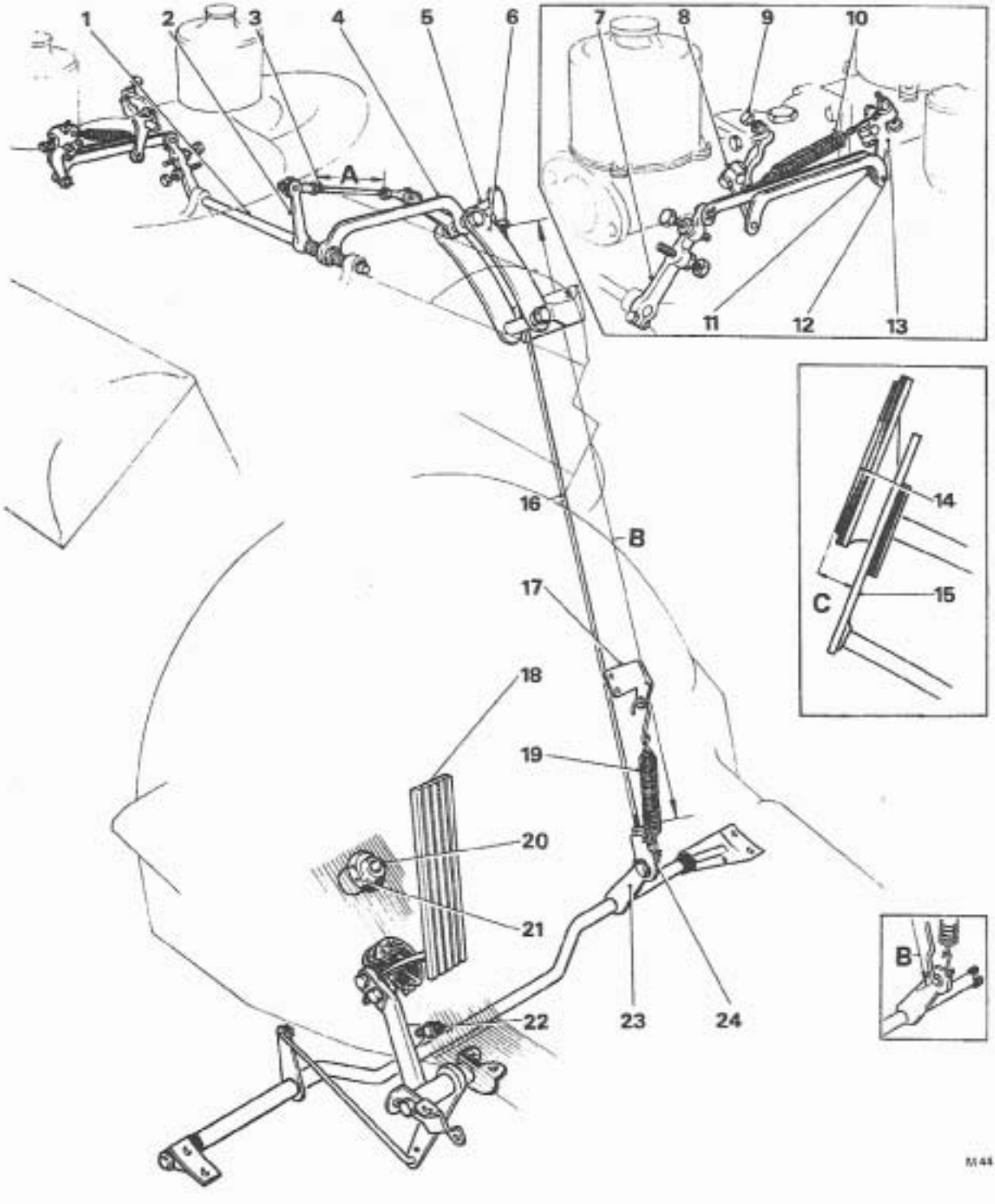

FIG. T140 THROTTLE CONTROL LINKAGE—LATE LH DRIVE CARS

Printed in Great Britain

September 1971

T.S.D. 2476

FIG. T140 THROTTLE CONTROL LINKAGE—LATE LH DRIVE CARS

A 2·265 in. to 2·300 in. (5,75 cm. to 5,84 cm.)
B 18·575 in. (47,18 cm.)
C 0·250 in. to 0·500 in. (0,63 cm. to 1,27 cm.)
1 'A' Bank control shaft
2 Lever — 'A' Bank control shaft to control rod
3 Control rod — 'A' Bank manifold lever to fulcrum lever
4 Tie-rod
5 Fulcrum lever
6 Compensator link
7 Lever — manifold to carburetter
8 Throttle lever — 'A' Bank
9 Slow running throttle stop screw
10 Return spring
11 Coupling link (one hole elongated when refrigeration is fitted)
12 Coupling link
13 Throttle lever — 'B' Bank
14 Brake pedal
15 Accelerator pedal
16 Control rod — accelerator to compensator linkage
17 Bracket
18 Accelerator pedal
19 Pull-off spring
20 Kick-down button
21 Lock-nut
22 Stop — accelerator pedal
23 Lever — accelerator pedal cross-shaft
24 Jaw

Assuming that the engine throttle controls have been correctly set and the choke and slow running controls are correct, proceed to adjust the micro-switches.

Damper and switch assembly

1. Disconnect the air ducting at the choke body end and move the ducting clear of the switches.
2. Disconnect the Yellow lead from the switch at its Lucar connector.
3. Connect one side of a test lamp to the Yellow lead and the other side to earth.
4. Switch on the ignition.
5. Ensure that the fast-idle cam is in the hot idling position (i.e. choke fully open).
6. Slacken the two $\frac{5}{16}$ in. U.N.F. nuts on the switch mounting spindle (*see Fig. T138*). Adjust the position of the switch and damper assembly so that the test lamp lights just before the throttle closes completely and extinguishes when the throttle is just clear of its off-stop. Tighten the nuts in this position.

Note The damper slows down the throttle during the last few degrees of movement as it is closing.
Allow time for the throttle to rest on its off-stop when determining the throttle closed position.

7. Switch off the ignition, remove the lamp and connect the Yellow lead.

Stator micro-switch

1. The stator micro-switch is non-adjustable.
2. It can be checked for correct operation by connecting a test lamp and checking to see if the lamp lights when the switch is contacted by the cam on the lever, with the ignition switched on.

Kick-down micro-switch

1. Disconnect the White/purple lead from the kick-down micro-switch.
2. Connect one side of a test lamp to the White/purple lead on the switch and the other side to earth.
3. Switch on the ignition.
4. Slacken the lock-nut on the 2 B.A. setscrew in the manifold lever shaft.
5. Adjust the 2 B.A. setscrew in the lever so that the test lamp lights when the lever is 0·025 in. (0,63 mm.) from the full throttle stop. Whilst carrying out this adjustment, ensure that the micro-switch has some over-travel when the lever is contacting the full throttle stop.
6. Tighten the 2 B.A. lock-nut.
7. Connect the air ducting.
8. Adjust the under-pedal kick-down button and full throttle stop so that the button must be depressed before kick-down is obtained. This should be done as follows.

Kick-down button—To adjust Carburetter mounted micro-switch

1. Remove the floor covering from the toe board on the driver's side of the car. The kick-down button can be seen beneath the accelerator pedal.
2. Slacken the large lock-nut, then adjust the body by screwing it up or down as required; tighten the lock-nut.
3. When setting the kick-down, care must be taken not to confuse part throttle down-changes and stator changes with the forced down-change (kick-down).
4. If, when adjusting the kick-down button, its position is such that it is in danger of being hidden by the carpet, an improvement can be made by shorten-

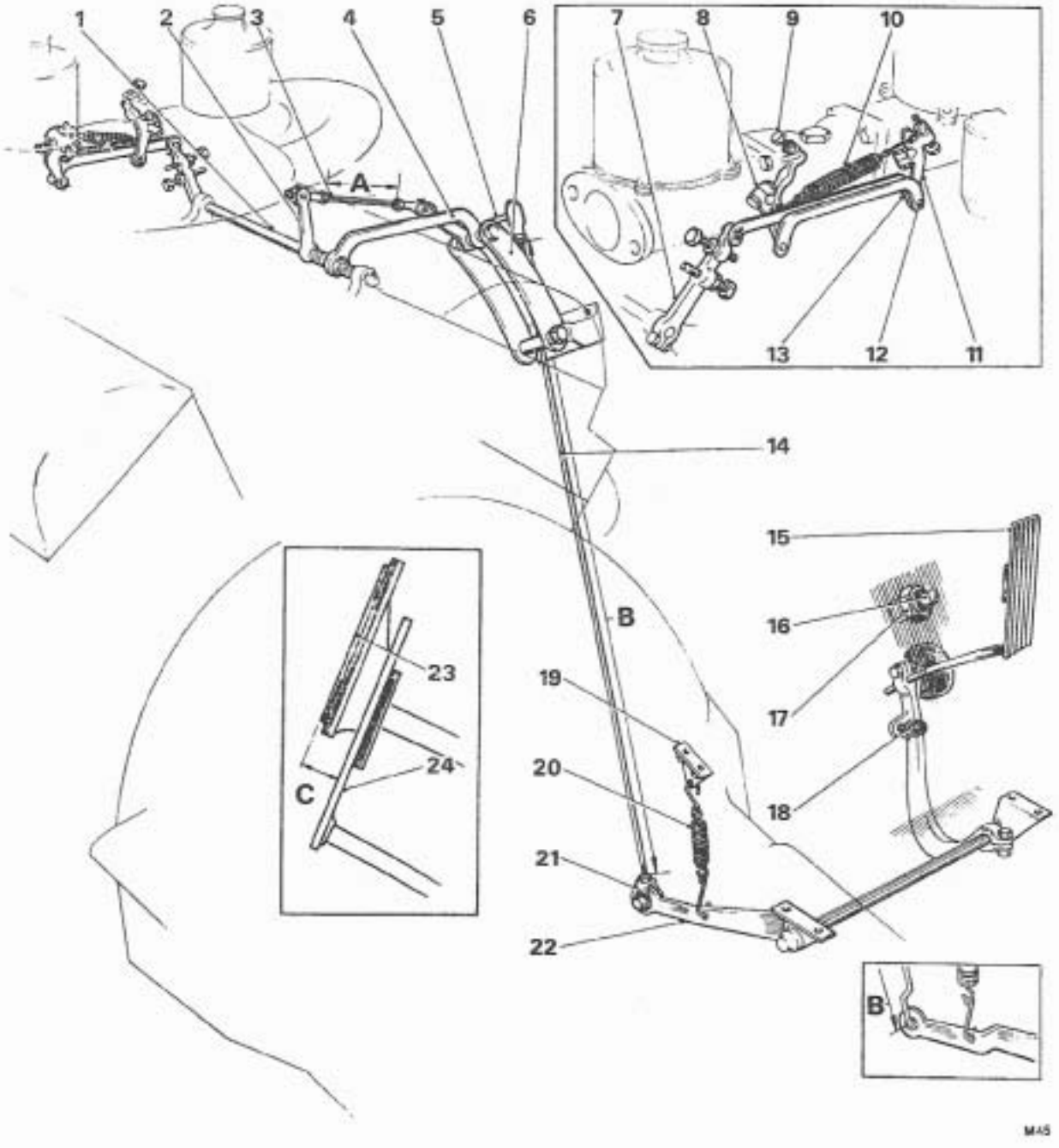

**FIG T141 THROTTLE CONTROL LINKAGE—
RH DRIVE CARS**

Printed in Great Britain
September 1971
T.S.D. 2476

FIG. T141 THROTTLE CONTROL LINKAGE—RH DRIVE CARS

A 2·265 in. to 2·300 in. (5,75 cm. to 5,84 cm.)
B 18·575 in. (47,18 cm.) inset 19·50 in. (50,00 cm.)
C 0·250 in. to 0·500 in. (0,63 cm. to 1,27 cm.)
1 'A' Bank control shaft
2 Lever — 'A' Bank control shaft to control rod
3 Control rod — 'A' Bank, manifold lever to fulcrum lever
4 Tie-rod
5 Fulcrum lever
6 Compensator link
7 Lever — manifold to carburetter
8 Throttle lever — 'A' Bank
9 Slow running throttle stop screw
10 Return spring
11 Throttle lever — 'B' Bank
12 Coupling link
13 Coupling link (one hole elongated when refrigeration is fitted)
14 Control rod — accelerator to compensator linkage
15 Accelerator pedal
16 Kick-down button
17 Lock-nut
18 Stop — accelerator pedal
19 Bracket
20 Pull-off spring
21 Jaw
22 Lever — accelerator pedal cross-shaft
23 Brake pedal
24 Accelerator pedal

ing the accelerator to compensator link control rod (*see Figs. T139, T140 and T141*). This will throw the pedal further away from the toe board, thus allowing the kick-down button to be raised.

5. The accelerator lever stop-bolt will have to be adjusted to suit.

6. Ensure that the closed throttle condition is still available.

Kick-down button—To adjust

Toe board mounted micro-switch

See Chapter K or Chapter U.

Stator and detent solenoid circuits—To check

The stator and detent solenoids can be checked for correct operation whilst the car is being driven on the road. This will enable the tester to determine whether or not the stator is changing its angle and also whether kick-down is obtainable at full throttle.

Stator solenoid—To check

1. Disconnect the White/brown lead from the Lucar connector on the solenoid case connector in the left-hand side of the transmission.

2. Connect a 12 volt test lamp between the lead and the connector. Position the test lamp so that it is visible from the driver's seat.

3. Drive the car and observe the test lamp.

4. The test lamp should light when the ignition is switched on and remain so until the accelerator pedal is moved sufficiently to 'crack' the throttles, then become extinguished above this speed.

5. At approximately 45 degrees of throttle opening the test lamp should again be illuminated and remain so regardless of any further throttle opening.

6. If the test lamp fails to light, check the solenoid micro-switch and controls for correct operation, and the circuit for continuity.

7. The solenoid itself can be checked by using a lamp and battery. Touch the solenoid case with one lead and the connector with the other lead; the lamp should light.

8. Remove the test lamp and connect the stator lead.

Detent solenoid—To check

All cars

1. Disconnect the White/green lead from the case Lucar connector.

Note On early cars the detent lead is White/purple. Connect a test lamp between the lead and the connector.

2. Drive the car in Drive range – third gear at a speed below approximately 70 m.p.h. (113 k.p.h.).

3. Depress the accelerator pedal so that the detent button on the toe board is felt. Press the pedal further to move the button. The lamp should light as the solenoid enforces the down-change.

4. If the lamp does not light, check the micro-switch and the controls for correct operation, also check the circuit for continuity.

5. The solenoid can be checked in a similar manner to the stator solenoid.

6. Check the detent lead inside the transmission case.

Checking controls with test box RH 7932

If actuator test box RH 7932 is available it can be used to check both the stator and detent solenoids as well as selecting the gear range positions. Proceed as follows.

1. Remove the stator and detent leads from the case connector, then position the test box where it can be seen by the driver.
2. Fit the stator and detent leads from the test box to the Lucar connections on the case connector. Ensure that the leads are correctly positioned.
3. Fit the transmission detent and solenoid leads onto the pick-a-back connectors on the test box leads.
4. Remove the multi-pin plug from the electric gearchange actuator and fit the plug from the test box in its place.
5. Pick up a positive power supply from the facia of the car (an old cigar lighter suitably wired would suffice) and connect it to the inlet side of the test box.
6. The transmission will then be isolated from the selector switch on the column and all the selector positions can be obtained by selecting the appropriate range as shown by the marked dial on the test box cover.
7. Drive the car and check the selection of the gear ranges and the operation of the stator and detent solenoids by observing the lamps on the test box.
8. The gearchange actuator can be checked by inserting the test box between the actuator and the feed from the multi-pin plug. The car multi-pin plug must be fitted to the test box, and the test box plug fitted to the actuator.
9. By operating the switch on the box and observing the lamps, the actuator can be operated and checked for correct operation.

Printed in Great Britain
September 1971
T.S.D. 2476

Section T6
REMOVAL OF UNITS

Removable units—Transmission in car

The following units can be removed from the transmission without the transmission being removed from the car.

The removal procedure for all the units is described in the appropriate section, with the exception of the pressure regulator valve, details of which are included in this Section.

1. Gearchange actuator (*see Section T7*).
2. Neutral start and height control switches (*see Section T7*).
3. Vacuum modulator and valve (*see Section T11*).
4. Governor assembly (*see Section T12*).
5. Speedometer drive (*see Section T13*).
6. Sump, strainer and intake pipe (*see Section T14*).
7. Control valve unit (*see Section T15*).
8. Rear servo (*see Section T16*).
9. Detent solenoid, connector, control valve spacer and front servo (*see Section T17*).
10. Rear extension (*see Section T18*).
11. Control rods, levers and parking linkage (*see Section T20*).

Pressure regulator valve—To remove (Transmission in car)

The current type of pressure regulator valve is a solid type and does not contain oil holes and an orifice cup plug as previous pressure regulator valves. This solid type of valve must only be used in the pump cover with the squared pressure regulator boss (*see Fig. T142*).

The previous pressure regulator valve with the oil holes and orifice cup plug can be used to service either type of pump cover.

1. Run the car onto a ramp or over an inspection pit. Drain the oil from the sump.
2. Remove the sump as described in Section T14.
3. Withdraw the intake pipe and strainer assembly.
4. Remove and discard the intake pipe 'O' ring.
5. Remove the setscrew which secures the detent roller spring; remove the spring and roller.
6. Slacken the lock-nut which secures the detent lever to the manual shaft.

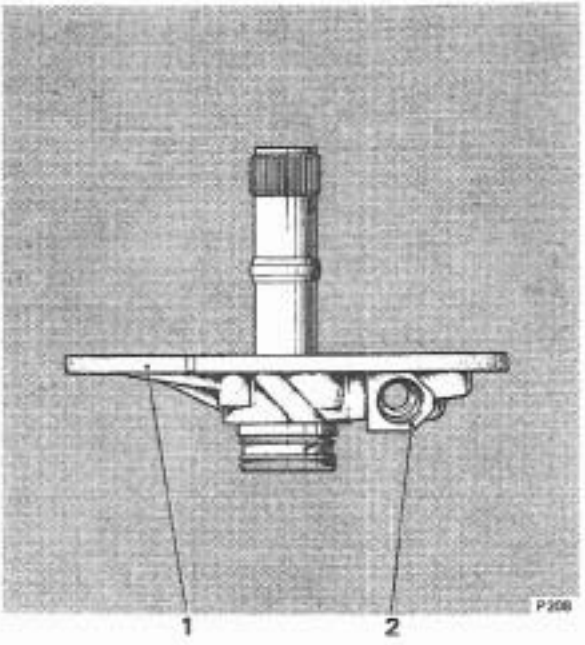

FIG. T142 SOLID TYPE REGULATOR VALVE

1 Regulator valve
2 Squared-off pressure regulator boss

FIG. T143 REMOVING THE PRESSURE REGULATOR VALVE

1 Rod
2 Sleeve
3 Circlip
4 Circlip pliers

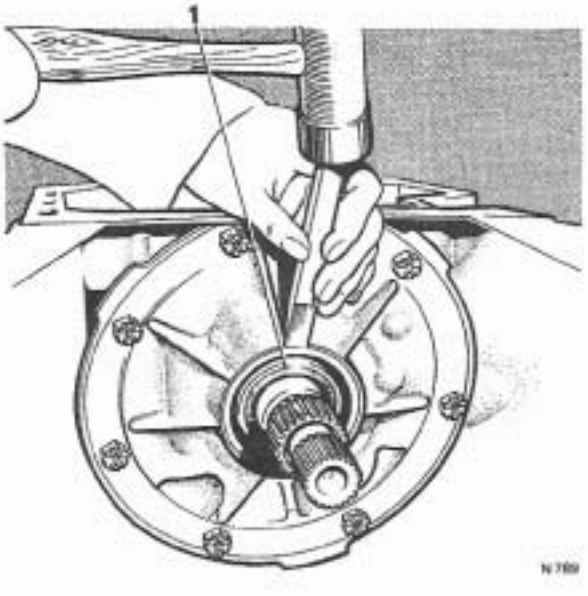

FIG. T144 REMOVING THE OIL PUMP SEAL

1 Oil seal

7. Remove the manual shaft pin from the case.

8. Remove the gearchange lever from the manual shaft.

9. Prise the detent lever from the manual shaft then remove the parking actuator rod and detent lever.

10. Ensure that the manual valve does not slide out of its bore in the control valve unit.

11. Push the manual shaft through the bore in the case in order to gain access to the pressure regulator valve bore.

12. Using a screwdriver or a steel rod, push the regulator boost valve sleeve against the pressure regulator spring (*see Fig. T143*).

Caution The pressure regulator spring is under extreme pressure and will force the valve sleeve out of its bore when the circlip is removed unless the sleeve is firmly held.

13. Continue to exert pressure on the valve sleeve then remove the circlip. Gradually relax the pressure on the valve sleeve until the spring pressure is released.

14. Carefully remove the regulator boost valve sleeve and valve, then withdraw the regulator spring.

15. Take care not to drop the valves, as they will fall out if they are not held.

16. Remove the pressure regulator valve and spring retainer. Remove the spacers (if fitted).

Pressure regulator valve—To fit

Before fitting, wash and examine all parts as described in Section T19.

1. Fit the spring retainer onto the pressure regulator spring. Fit any spacers which were previously removed.

2. Fit the pressure regulator valve onto the spring, stem end first.

3. Fit the boost valve into the sleeve with the valve stem outward then hold together all the parts so that the pressure regulator spring is against the valve sleeve.

4. Fit the complete assembly into the pressure regulator valve bore, taking care that the parts do not fall during the operation.

5. Using a screwdriver or a steel rod, push the regulator boost valve sleeve against the regulator spring pressure until the end of the sleeve has passed beyond the circlip groove.

6. Fit the circlip then relax the pressure on the sleeve.

Note To facilitate fitting the circlip, encircle it around the screwdriver or steel rod, compress the circlip, then push it upward into the groove in the valve bore.

Printed in Great Britain

7. Fit the parking actuator rod and the detent lever, ensuring that the rod plunger is under the parking brake bracket and over the parking pawl.
8. Slide the manual shaft into the case and through the detent lever.
9. Fit the gearchange lever.
10. Fit the lock-nut onto the manual shaft. Torque tighten the nut.
11. Ensure that the manual valve is engaging with the pin on the detent lever.
12. Retain the manual shaft with the pin. Straighten the pin to lock it in position.
13. Fit the detent spring and roller assembly; torque tighten the setscrew.
14. Fit the intake pipe and strainer assembly and the sump as described in Section T14.
15. Top-up the transmission with an approved fluid as required.

Oil pump seal—To renew

1. Remove the transmission from the car (*see Section T9*).
2. Carefully drive the point of a chisel under the lip of the seal then prise the seal out of the pump body (*see Fig. T144*).
3. Before fitting a new seal, ensure that the body bore is clean and free from burrs and that the garter ring is on the seal.
4. Check the finish of the converter neck and the bearing surface in the pump body.

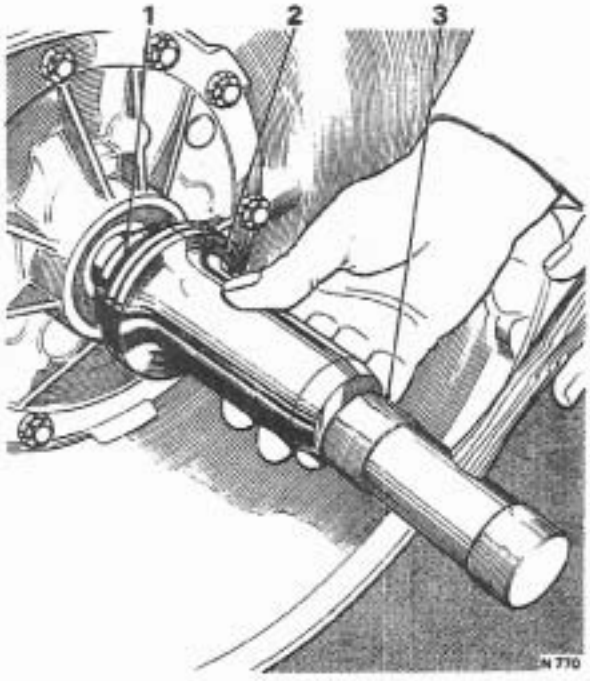

FIG. T145 FITTING THE OIL PUMP SEAL

1 Oil seal
2 Seal fitting tool
3 Mallet

5. Lightly smear the outer edge of the seal case with 'Wellseal' then fit the seal to the pump using tool RH 7953 (J–21359) as shown in Figure T145.
6. Fit the transmission to the car (*see Section T9*).

September 1971

T.S.D. 2476

Printed in Great Britain
September 1971
T.S.D. 2476

Section T7
GEARCHANGE ACTUATOR, NEUTRAL and HEIGHT CONTROL SWITCHES

The electric gearchange actuator (*see Figs. T146 or T147*) is mounted on a bracket secured to the transmission rear extension.

When the ignition is switched on and the selector lever on the steering column is moved to one of the gear range positions, current is allowed to flow to the actuator motor via a relay.

The motor rotates and turns the worm shaft through the flexible coupling. As the worm gear rotates, the slip ring which is secured to the worm gear also rotates until an insulated slot in the slip ring is aligned with the live contact. When this position is reached, the current is cut off and the motor ceases to rotate.

The electric actuator is wired so that should the driver stop the car in a gear range other than Park then switch off the ignition, he can still lock the transmission by moving the selector lever on the steering column to the parking 'P' position.

Having done this, if he then moves the lever out of this position, or if the lever is accidentally moved to a drive position, the actuator will not respond until the ignition is switched on again.

The neutral start switch is actuated only when the transmission is in Neutral or Park; the engine cannot be started until the micro-switch is in its operating position. Also actuated when in Neutral or Park is the height control switch which selects fast levelling whilst the car is stationary (*for information concerning the operation of the levelling switch see Chapter G – Section G9 – Solenoid valve – T.S.D. 2476 Workshop Manual*).

Actuator—To test
(Cars prior to car serial number SRX 9001)

The two tests described are designed to prove if a fault lies within the gearbox actuator or elsewhere in the gearchange electrical circuit.

The first test is designed to discover whether the pins of the actuator loom socket receive the correct electrical signal in sequence, as dictated by the position of the gear range selector lever.

1. Ensure that the gearchange thermal cut-out switch on the distribution board (fuse panel) has not cut-out. This can be done by depressing the Red button. The position of the button will not change whether the switch has tripped or not, however a tripped switch will click on pressing the button.
2. Ensure that fuse number 12 is intact.
3. Disconnect the low tension wire from the distributor and turn the ignition switch to the 'on' position.
4. Slightly loosen the actuator loom socket and check the actuator function. This will reveal any poor contact which may exist between the plug and socket.
5. Unscrew and withdraw the loom socket from the plug of the gearchange actuator.
6. Connect the negative side of a suitable voltmeter to a good earth point. The positive side should be connected in turn to the various pins of the loom socket (*see Test Chart — Actuator Socket*).
7. Move the gear range selector lever to the 'Reverse' position and check that all the pins of the

loom socket are of the correct polarity or are neutral, as indicated in the 'Test Chart'.

Note Each pin in the socket is identified by a letter which is moulded in the rubber body adjacent to each pin.

8. Carry out the above operation in each of the gear range selector lever positions, checking each pin in turn with the information given in the 'Test Chart'.

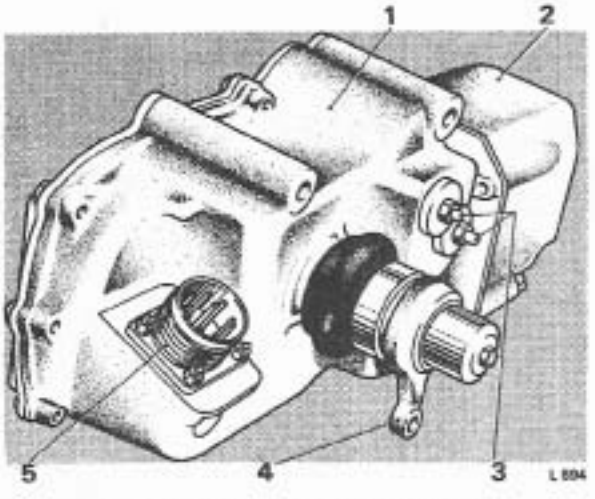

FIG. T146 ELECTRIC GEARCHANGE (Cars prior to Car Serial number SRX 9001)

1 Actuator casing
2 Motor cover
3 Solenoid securing nuts
4 Actuating lever
5 Plug socket

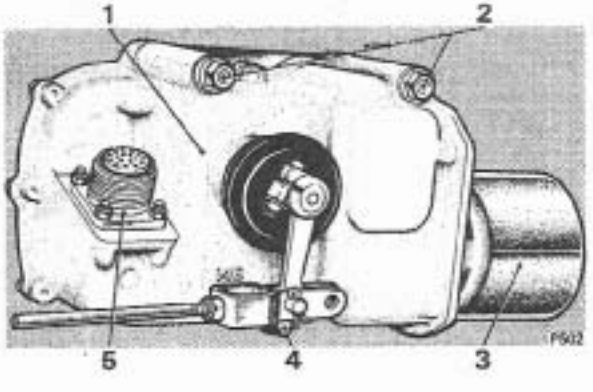

FIG. T147 ELECTRIC GEARCHANGE ACTUATOR (Car Serial Number SRX 9001 and onwards)

1 Actuator casing
2 Actuator securing bolts
3 Motor cover
4 Actuating lever
5 Plug socket

9. Switch off the ignition and ensure that pin number G of the actuator socket is now neutral.

10. Reconnect the socket to the actuator and refit the distributor low tension cable.

Note If an incorrect reading is obtained during any of the above tests, this will indicate that the gearchange circuit is probably at fault and not the actuator.

It should be noted that the voltage readings obtained must not be more than 0·25 Volts less than the battery voltage. However, if the test sequence does not reveal a discrepancy, then the fault may be either inside the transmission actuator or in the transmission and neutral start switch linkage.

Before removing the actuator the transmission linkage should be disconnected from the actuator output lever and checked for excessive stiffness.

The transmission linkage should move into any gear when a load of approximately 10 lb. (4,53 kg.) is applied to the disconnected rod.

If the linkage operation is satisfactory then it will be necessary to remove, recondition and test the actuator as described later in this Section.

After fitting the reconditioned actuator to the car, it should be finally tested as follows.

1. Disconnect the earth cable from the battery negative terminal, or from the boot quick release terminal when fitted.

2. Connect an ammeter capable of reading at least 20 Amps. between the battery negative terminal and the loose end of the earth cable.

3. Ensure that all accessories such as the rear window demister and blower motors are switched off and then switch on the ignition. Note the reading shown on the ammeter.

4. Move the gear range selector lever between 'Neutral' and 'Reverse' gear positions and check that the extra reading on the ammeter caused by the operation of the actuator does not exceed 10 Amps.

5. Check that the actuator moves smoothly and quietly to each position selected and that the output lever stops in the correct position and does not 'hunt' about that position more than once before finally stopping.

6. Remove the ammeter and connect the battery negative cable.

Actuator—To Test (Car serial number SRX 9001 and onwards)

The gearbox actuator contains a series of cams which operate micro-switches to fulfil the functions of the neutral start switch, the fast levelling switch and the Park anti-theft switch. In view of this, the test procedures for the actuator and for the switch circuits have been segregated.

Printed in Great Britain
September 1971
T.S.D. 2476

TEST CHART — ACTUATOR SOCKET
(Cars prior to Car Serial Number SRX 9001)

Socket Pin No.	Gear Range Lever Position						General Notes
	P	R	N	D	I	L	
A	N	N	Pos	N	N	N	
B	Pos	N	N	N	N	N	
C	N	N	N	Pos	N	N	
D	N	N	N	N	Pos	N	
E	N	N	N	N	N	Pos	
F	N	Pos	N	N	N	N	
G	Neg	Neg	Neg	Neg	Neg	Neg	This pin is Negative when the ignition is ON, and Neutral when the ignition is OFF.
H	Pos	Pos	Pos	Pos	Pos	Pos	This pin is directly connected to the thermal cut-out switch.
I	Neg	Neg	Neg	Neg	Neg	Neg	This pin is fixed to the valance earth point.

Key
Pos. Common with the battery positive terminal
Neg. Common with the battery negative terminal
N Neutral — no connection to either battery terminal

Test procedure for micro-switch circuits

Before conducting these tests ensure that fuse number 11 and 12 are intact.

Switch the ignition on.

Battery voltage should now be available at pin 'T' of the loom socket.

'Park' anti-theft switch circuit

1. Using a suitable length of cable connect pin 'P' of the actuator loom socket to earth. This action should produce an audible 'click' as the anti-theft relay at the rear of the switchbox operates.

'Neutral' start switch circuit

1. Place the gear range selector lever in the 'Neutral' position.
2. Check that each time the ignition key is turned to the 'Start' position, battery voltage is available at pin 'S' of the loom socket.
3. Repeat operation 2 with the gear range selector lever in the 'Park' position.
4. Disconnect the thin Brown cable from the 'Lucar' connector of the starter motor solenoid.
5. Using a suitable length of cable connect pins 'S' and 'K' together. The starter relay on the longeron should now operate each time the ignition key is turned to the 'Start' position.
6. Fit the Brown cable to the starter motor solenoid.

'Fast level' switch circuit

1. Using a suitable length of cable connect pins 'T' and 'J' together. This action should cause the fast levelling solenoid to operate.

If a fault is discovered in the switch circuits during any of the three tests, the fault should be traced and rectified and the test repeated.

If no fault is evident in the switch circuits this would indicate that the actual switches in the gearbox actuator are in need of adjustment or renewal.

The procedure for renewal and/or adjustment of these switches is illustrated in Figure T157.

Actuator test

1. Ensure that the gearchange thermal cut-out switch on the distribution board (fuse panel) has not cut-out. This can be done by depressing the red button on the thermal cut-out switch.
2. Disconnect the low tension cable from the distributor and turn the ignition switch to the 'on' position.
3. Slightly loosen the actuator loom socket and re-check the actuator function. This will reveal any poor contact which may exist between the plug and the socket.
4. Unscrew and withdraw the loom socket from the plug of the gearbox actuator.
5. Move the gear range selector lever to the 'Park'

TEST CHART — ACTUATOR SOCKET
(Car Serial Number SRX 9001 and onwards)

Socket Pin No.	Gear Range Lever Position						General Notes
	P	R	N	D	I	L	
A	N	Pos	N	N	N	N	
B	N	N	Pos	N	N	N	
C	N	N	N	Pos	N	N	
D	N	N	N	N	Pos	N	
E	N	N	N	N	N	Pos	
F	Neg	Neg	Neg	Neg	Neg	Neg	This pin is Neg. when ignition is switched ON and Neutral when ignition is OFF.
H	Neg	Neg	Neg	Neg	Neg	Neg	This pin is permanently connected to earth.
M	Pos	N	N	N	N	N	
N	Pos	Pos	Pos	Pos	Pos	Pos	This pin is connected to the thermal cut-out switch.

Key
Pos. Common with the battery Positive terminal
Neg. Common with the battery Negative terminal
N Neutral — no connection to either terminal

position and check that the pins of the actuator loom socket are of the correct polarity or are neutral. (*see Test Chart — Actuator Socket*).

Note Each pin in the socket is identified by a letter which is moulded into the rubber body adjacent to each pin.

6. Carry out Operation in each of the gear range selector lever positions checking each pin in turn with the information given in the chart.

7. Switch off the ignition and ensure that pin 'F' is now neutral.

8. Connect the socket to the actuator and fit the distributor low tension cable.

Note If an incorrect reading is obtained during any of the above tests, this will indicate that the gearchange circuit is at fault and not the actuator.

It should also be noted that the voltage reading obtained must not be more than 0·5 Volt less than the battery voltage. However, if the test sequence does not reveal a fault then the problem must be caused by a fault within the transmission actuator.

Before removing the actuator, the gearbox linkage should be disconnected from the actuator output lever and checked for excessive stiffness.

The transmission linkage should move into any gear when a load of approximately 10 lbs. (4,53 kg.) is applied to the disconnected rod.

If the linkage operation is satisfactory then it will be necessary to remove, re-condition and test the actuator as described later in this section.

After fitting the reconditioned actuator to the car, it should be finally tested as follows.

1. Disconnect the earth cable from the battery.

2. Connect an ammeter capable of reading at least 15 amps between the battery negative terminal and the loose end of the earth cable.

3. Ensure that all accessories such as the rear window demister and blower motors are switched off and then switch on the ignition. Note the reading shown on the ammeter.

4. Move the gear range selector lever progressively through each gear position and check that the extra reading on the ammeter caused by the operation of the actuator does not exceed 7·50 amps.

5. Check that the actuator moves smoothly and quietly to each position selected and that the output lever stops in the correct position and does not 'hunt' about that position before finally stopping.

6. Remove the ammeter and reconnect the battery negative cable.

Gearchange electric actuator—To remove (All cars)

Should the electric gearchange actuator fail to operate it should be noted that the system includes a thermal cut-out. This device prevents the motor from being

Printed in Great Britain
September 1971
T.S.D. 2476

overloaded should the gearchange linkage become obstructed and as a result, gives the impression of actuator failure.

Before removing the actuator, ensure that the controls are free and adequately lubricated, also that the actuator electrical system is cool enough for the thermal cut-out to permit the motor to operate. Press the reset button in the main fuse box to reset the cut-out.

It is recommended that the easiest and quickest method of dealing with actuator failure, is by substituting the faulty actuator for a service exchange unit. If a service exchange unit is not obtainable but adequate repair facilities are available, proceed as follows.

1. Disconnect the negative lead from the battery situated in the luggage compartment.
2. Remove the split pin and clevis pin from the actuating lever on the electric actuator; disconnect the rod from the lever.
3. Unscrew and remove the 'multi-pin' plug.
4. Disconnect the breather pipe from the governor cover plate and the actuator side cover.
5. Remove the three bolts which secure the actuator to the rear extension bracket then remove the actuator.

Gearchange electric actuator—To fit (All cars)

1. Fit the actuator to the rear extension of the transmission.
2. Torque tighten the bolts.
3. Fit the 'multi-pin' plug and tighten the knurled nut.
4. Fit the breather pipe to the actuator cover and to the top rearmost setscrew of the governor cover plate.

Cars produced after Car Serial Number SRX 3254 — **other than Coachbuilt** and CRH 3399 — **Coachbuilt** are fitted with a modified actuator breather system.

Originally, the breather system consisted of a steel breather pipe which connected the actuator to atmosphere. The modified system, incorporates a flexible plastic tube as an extension to the early system and connects the open end of the steel breather pipe to an adapter in the cross-member.

It is **essential,** that the **early** type of system is vented to atmosphere at the end of the steel pipe and that the **later** type of system is connected to the adapter in the cross-member by the flexible pipe.

Gearchange electric actuator—To dismantle (Cars prior to car serial number SRX 9001)

1. Unscrew the setscrew in the centre of the actuating lever cover then remove the cover.
2. Using spring compressing tool (RH 7843) compress the coil spring sufficiently to enable the hardened steel pin to be removed; drive out the pin.

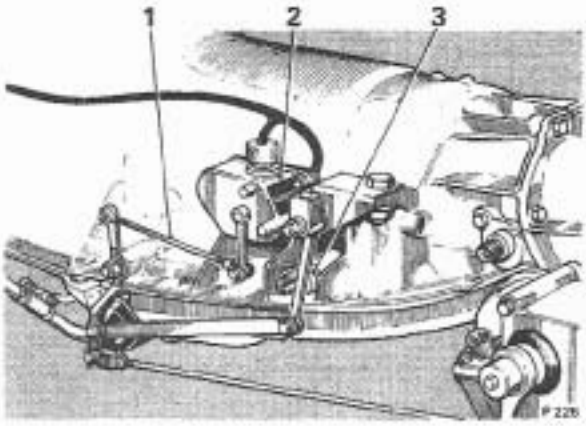

FIG. T148 DETENT AND STATOR SOLENOID CONNECTIONS (INITIAL PRODUCTION CARS)
1 Link rod
2 Micro-switch casing
3 Detent and stator solenoid connections

3. Remove the spring compressing tool then withdraw the operating lever, spring and spring retaining cup from the shaft.
4. Remove the nuts and washers which secure the side cover to the main casing; remove the cover.

Note The cover gasket is sealed initially with jointing compound on both sides, as a result, the cover may not be easily removable. Use a hardwood wedge to loosen the cover. Do **not** use a screwdriver between the joint faces in an effort to remove the cover as this may cause damage to the joint faces and destroy the waterproofing effect. Discard the gasket.

5. Disconnect the motor feed to the relays.
6. Disconnect the leads from the motor earth and solenoid feed.
7. Remove the four nuts which secure the motor cover to the main casing; remove the cover.
8. The gasket is sealed with jointing compound and care should be taken when removing the cover.
9. Discard the gasket.
10. Withdraw the motor from the four long studs. The motor is secured to a mounting plate and this will be removed with the motor.
11. Remove the rubber grommet and withdraw the leads.
12. Discard the gasket.
13. Remove the coupling dog from the motor output shaft.
14. Remove the flexible rubber coupling from the brake drum.
15. Remove the nuts and washers which secure the motor to its mounting plate.

16. Remove the motor from the mounting plate, withdraw the leads from the grommet and through the hole in the plate.
17. Remove the nuts and washers which secure the plug leads to the connection on the insulated base plate; detach the leads from the connections.
18. Unscrew the nuts and washers which secure the plug assembly to the actuator casing.
19. Remove the plug and withdraw the leads from the casing; retain the rubber gasket which fits between the casing and the plug.
20. Remove the nuts and washers which secure the insulated base plate to the main casing. Carefully lift the base plate from the studs.

Note Care should be exercised when handling the baseplate assembly to avoid damaging the relays and contacts.

21. Using tool (RH 7841) remove the roll pin which secures the brake drum to the worm shaft. Push the pin through the drum and shaft until it can be removed; discard the pin.
22. Remove the drum from the worm shaft. It will be necessary to hold the brake shoe away from the drum whilst the drum is being removed.
23. Mark the top of the brake shoe in pencil to facilitate correct assembly.
24. Unscrew the dome nuts which secure the brake solenoid assembly to the main casing; remove the cup washers and the rubber washers. Remove the assembly from the casing.
25. Secure the brake shoe assembly and spring to the solenoid with adhesive tape to retain them as a unit.
26. Remove the circlip and washers from the outer side of the seal which fits over the actuator casing and around the output shaft; remove the seal.
27. Remove the circlip which locates the output shaft and slip ring assembly in the main casing then remove the washer.
28. Withdraw the slip ring and shaft from the bush in the actuator casing; remove the washer from the shoulder behind the slip ring.
29. Remove the circlip which locates the worm shaft and bearings in the actuator casing.
30. Remove the adjusting washer and label it to ensure that the correct washer is fitted during assembly.
31. Gently tap the worm shaft and the bearings from the casing. The bearings are a push fit in the casing bores and no difficulty should be experienced when removing them.

It is recommended that no further dismantling of the actuator be attempted. If necessary, the following components should be renewed as separate assemblies, the base plate, plug, brake shoe, solenoid, brake solenoid and the output shaft and slip ring. The motor should be renewed as an assembly also although it may be dismantled for inspection.

Gearchange electric actuator—To dismantle (Car serial number SRX 9001 and onwards)

It should be noted that there are differences between the actuators fitted to cars with or without Automatic Speed Control. The differences are in the type and terminations of the micro-switches and in one of the cables to the height control switch.

1. Disconnect the transmission linkage, the actuator loom plug and breather pipe; then remove the actuator from the car.
2. Remove the eight 2 B.A. nuts and washers and carefully withdraw the side casing.
3. Remove the 0·250 in. (6,35 mm.) nut and washer and withdraw the cam noting the relative position between the cam and the output lever.
4. Disconnect all terminals on the contact plate, the dual relay and the micro-switches.
5. Remove the four 3 B.A. nuts and withdraw the contact plate. It should be noted that on early actuators, two of the four studs are sleeved and these sleeves should be removed together with the contact plate.
6. Remove the nuts and bolts which secure the micro-switches and the dual relay to the contact plate. Discard the micro-switches, relay and contact plate.
7. Slacken the clamping bolt and remove the output lever.
8. Remove the washer and rubber boot; discard the boot.
9. Remove the circlip and thrust washer.
10. Withdraw the slip ring and gear assembly from the actuator case.
11. Remove and discard the contact segments from the slip ring.
12. Remove the three 0·250 in. (6,35 mm.) setscrews from the side of the actuator casing and carefully remove the motor assembly and drive collars. Remove the sealing ring from the actuator case.
13. Remove the internal circlip holding the bearing into the case and push the wormshaft and bearings out of the casing.
14. Remove the loom socket from the actuator casing.

Note It will now be necessary to inspect and prepare certain components for re-use.

Gearchange electric actuator—To inspect (All cars)

1. Examine the magnesium casing for cracks or other damage.
2. Ensure that the joint faces are clean and free from burrs.
3. Wash the gearchange operating lever, spring and covers in clean paraffin then examine them for general wear.

Printed in Great Britain
September 1971
T.S.D. 2476

4. Ensure that the breather pipe is clear and free from damage.

5. Examine the driving dog slot for excessive wear, also the mating shaft on the drive end of the motor armature shaft. The dog should be an easy sliding fit on the shaft but without excessive side play.

6. Examine the general condition of the plug assembly.

7. Ensure that no strands of wire are broken where they enter the pins. In the event of the plug being considered unserviceable, it is recommended that the whole assembly be renewed, rather than an individual connection. Special crimping tools and 'Cannon' insert tools are required for assembly purposes and unless these are available the work should not be attempted.

8. Examine the eight spring contacts for security on the insulated base.

Care must be exercised when handling the assembled base plate so that the contacts and the relays are not damaged in any way.

9. Check the height of the contacts from the base plate. The contact point should be approximately 0·485 in. (12,3 mm.) from the contact (lower) side of the base. If excessive wear has occurred on the contact points the base assembly should be renewed.

10. If the dual relay assembly is faulty, it is recommended that a new assembly be fitted rather than attempt rectification. The relays are precision units and are accurately set to give the correct operating times. The spring-loaded adjusting screw is set during the initial build of the relay and the setting should not be altered.

11. Ensure that the terminals and the terminal blocks are secure on the insulated base.

Cars prior to car serial number SRX 9001

12. Examine the brake drum for scoring or damage. The brake drum should be a push fit on the worm shaft. If the drum is slack on the shaft, examine the drum bore and the shaft for signs of fretting.

13. Remove the adhesive tape from the brake shoe and solenoid assembly.

14. Ensure that the assembled plunger and brake shoe will slide freely into the solenoid.

15. If either the brake shoe assembly or the solenoid is unserviceable they should not be renewed separately. The components are tested as one complete assembly during initial build and must remain as such, unless equipment is available that will enable separate assemblies to be tested and 'paired' (*see Dimensional Data at the end of this Section*).

16. Examine the brake linings for wear.

(All cars)

17. Examine the general condition of the wiring.

18. If the components are satisfactory, retain them with adhesive tape until they are required for final assembly.

19. Check the tightness of the four 5 B.A. screws which secure the slip ring assembly to the shaft.

20. Ensure that a 0·025 in. (0,64 mm.) air gap exists on each side of the silver plated segments which are secured to the slip ring.

21. Ensure that the edges of the slip ring around the air gap are free from burrs.

22. Examine the slip ring face for signs of tracking. This should not normally occur but, if signs of tracking are found, the slip ring assembly must be renewed.

23. Examine the teeth on the worm gear and the worm for damage or uneven wear.

24. Examine the ball bearing bores in the main casing for signs of fretting. The bearing should be a light push fit in the casing. Reject the casing if the push fit cannot be obtained.

25. Examine for wear the bush which supports the output shaft. The shaft should be a running fit in the bush, without excessive clearance i.e. the shaft should not rock in the bush (*see Dimensional Data at the end of this Section*).

Actuator socket and cable assembly

1. Inspect the cables where they enter the pins of the plug.

2. Ensure that no corrosion exists and that none of the individual cable strands are broken.

Actuator casing

1. Inspect all the sealing faces and the actuator casing and the side cover.

2. Remove all traces of sealing joint and sealing compound.

Wormwheel

1. Inspect the wormwheel for abnormal wear of the teeth.

Wormshaft bearings

1. Inspect the bearings for undue wear or signs of roughness when rotated.

Gearchange electric actuator—To assemble (Cars prior to car serial number SRX 9001)

1. Wash the bearings and shaft assembly in clean paraffin (kerosene) then dry them with compressed air.

2. Lightly lubricate the bearings with Esso Beacon grease.

3. Ensure that the actuator casing is clean and dry, then fit the shaft and bearings. Do not use force to fit the bearings to the casing.

4. Fit the adjusting washer and the circlip.

5. Mount a dial test indicator so that the plunger rests on the end of the worm shaft (*see Fig. T149*).

6. Move the worm shaft backward and forward, noting the clock reading. If necessary, adjust the

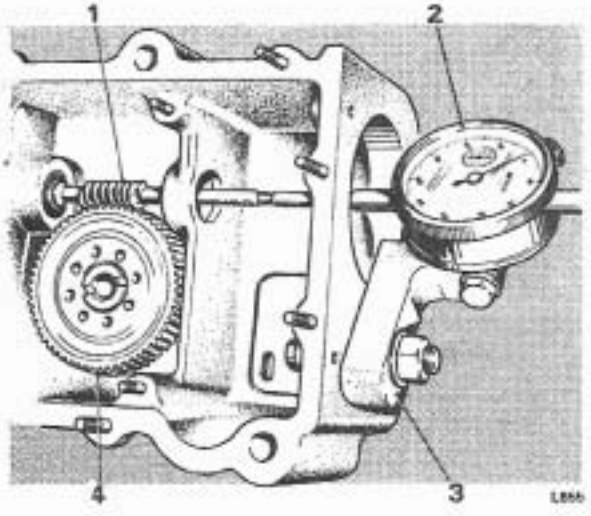

FIG. T149 CHECKING WORM SHAFT END FLOAT

1 Worm shaft
2 Dial indicator gauge
3 Gauge arm
4 Slave gear

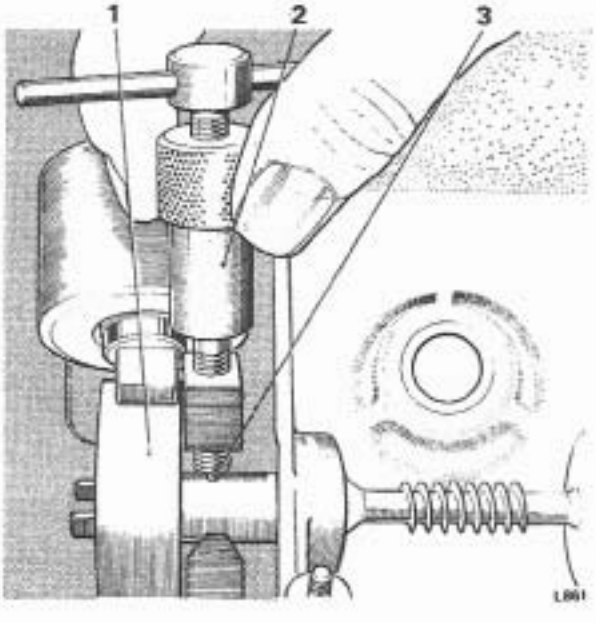

FIG. T150 FITTING THE BRAKE DRUM ROLL PIN (EARLY CARS)

1 Brake drum
2 Tool
3 Roll pin

washer to give an end float of between 0·002 in. and 0·005 in. (0,05 mm. and 0,13 mm.). It should be appreciated that the bearings must be no more than a light push fit in the casing to achieve this end float (*see Dimensional Data at the end of this Section*).

7. Ensure that both the output shaft and the porous bronze bush are clean; **do not wipe the bush with a degreasing agent.**

8. Lightly lubricate the shaft with Shell Tonna E oil. Fit a washer over the shaft then fit the shaft into the bush in the casing.

9. Fit a washer over the end of the output shaft then to the circlip.

10. Lightly lubricate the nylon worm gear with Esso Beacon grease.

11. Fit the rubber seal to the casing. A light smear of Esso Beacon grease applied to the inside of the seal will make this operation easier.

12. Fit the remaining washer and circlip to the shaft.

13. Ensure that the worm shaft will turn freely.

14. Rotate the output shaft until the open circuit sections are parallel with the worm shaft.

Note If the open circuits are at 90° to the worm shaft, the actuator will not operate when switched on initially

15. Ensure that the pencil mark on the brake shoe is at the top.

16. Remove the adhesive tape from the brake shoe and solenoid assembly.

17. Fit the assembly into the actuator casing.

18. Fit the seal washers, cup washers and dome nuts. **Do not** tighten the nuts at this stage.

19. Push down the brake drum onto the worm shaft until the pin holes are aligned. If either the drum or the shaft is a new component, ensure that the drum can be pushed onto the shaft, otherwise it will be difficult to align the holes. It will be necessary to hold the brake shoe in, against spring pressure, whilst the drum is fitted.

20. Fit a new roll pin to the shaft and drum, using tool (RH 7841) as shown in Figure T150.

21. Remove the tool, ensuring that the pin protrudes equally on each side.

22. The brake should be set in relation to the brake drum and solenoid as follows.

23. Obtain a smooth strip of soft metal e.g. aluminium, 0·048 in. (1,22 mm.) thick, 0·75 in. (19,0 mm.) wide and bend it into half circle, 1·00 in. (25,4 mm.) radius.

24. Slide the metal onto the outside of the drum.

25. Push the solenoid assembly in the direction of the brake drum until the brake shoe abuts the metal strip (*see Fig. T151*).

26. Tighten the two dome nuts.

Printed in Great Britain

September 1971

T.S.D. 2476

27. Remove the metal strip. When the solenoid is operated, the plunger will then travel a distance of 0·035 in. (0,89 mm.).

28. Fit the insulated base plate with the eight contacts and the relays. Care should be taken with this operation so that the settings of the relays and the position of the contacts are not disturbed.

29. Evenly tighten the four 3 B.A. nuts.

30. Ensure that a gap of approximately 0·050 in. (1,3 mm.) exists between each contact. The slip ring and contacts can be seen through the motor mounting orifice.

31. View the contacts through the gaps in the contact plate and ensure that the contacts touch the slip ring centrally, between the outside diameter of the slip ring and the outer perimeter of the rivet heads. There should be a clearance of approximately 0·062 in. (1,6 mm.) on each side (*see Fig. T152*).

32. Fit the rubber gasket to the plug assembly mounting face on the actuator casing.

33. Fit the plug assembly, ensuring that the two largest pins are lowermost. It is advisable to contain the leads with adhesive tape before attempting to thread them through the casing and the contact assembly.

34. Remove the tape, then run all the leads to their respective connections (*see Fig. T153*).

35. Fit the nuts and washers then tighten them, starting at the one furthest away from the plug and progressing toward the plug.

Caution Do not fit any nuts which are tight on the threads of the studs in the terminal blocks. If a tight nut is fitted there is a danger that the terminal screw will turn and the terminal block will become loose, resulting in a loose connection between contact and screw. If in doubt about the firmness of a contact, remove the base plate and tighten the terminal screw.

36. Secure the actuator motor to its mounting plate studs with the three 2 B.A. half nuts and spring washers.

37. Feed the motor supply leads through the bore of the mounting plate, then through the grommet. The longer end of the grommet fits into the casing.

38. Ensure that the rear face of the actuator casing and the front face of the mounting plate are clean and free from burrs, then apply a thin coat of Wellseal to the faces.

39. Fit a new gasket to the rear face.

40. Fit the flexible coupling onto the brake drum.

41. Fit the coupling dog onto the drive end of the motor armature shaft.

42. Fit the motor onto the four long studs.

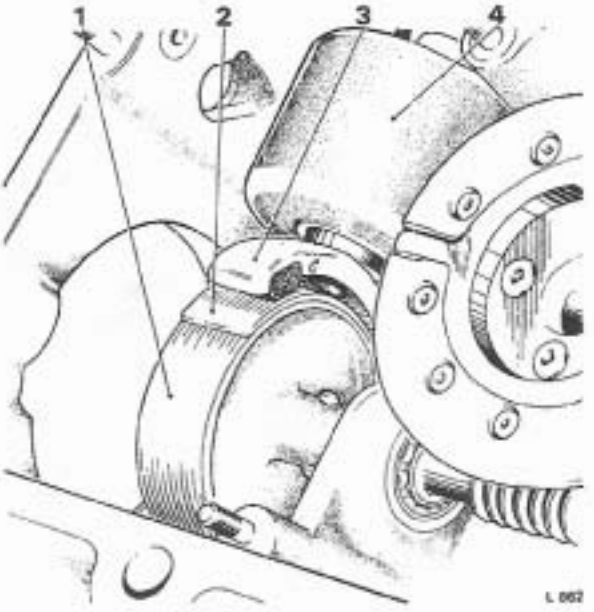

FIG. T151 SETTING THE SOLENOID BRAKE (EARLY CARS)

1 Brake drum
2 Spacer
3 Brake shoe
4 Solenoid

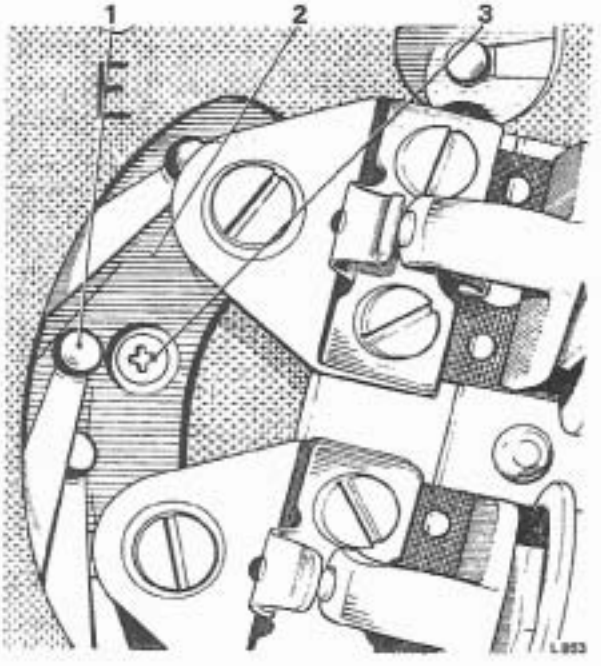

FIG. T152 CHECKING CONTACT POSITION

1 Contact
2 Slip ring
3 Securing screw

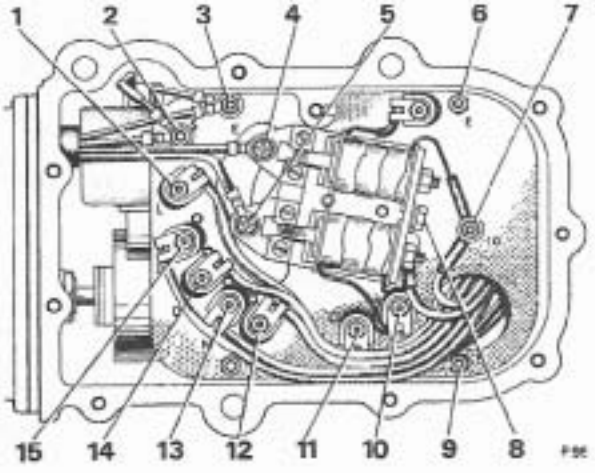

FIG. T153 WIRE CONNECTIONS
(Cars prior to Car Serial Number 9001)

1 Black/White from plug to terminal L
2 Green from both solenoid and motor to terminal S
3 Black from solenoid and black/green from motor to terminal E
4 Red/Green from motor to F1 relay terminal
5 Blue/Green from motor to F2 relay terminal
6 Black from relay coil motor end to terminal F2
7 Black from relay coil end and green/black from plug to terminal 1G
8 Brown/black from plug to relay positive feed terminal
9 Black from plug and red from relay coil plug end to terminal E
10 Red from relay coil motor end to terminal F1
11 Black/brown from plug to terminal P
12 Black/red from plug to terminal R
13 Black/blue from plug to terminal N
14 Black/green from plug to terminal D
15 Black/yellow from plug to terminal I

43. Feed the leads through to the actuator casing, at the same time position the grommet.

44. Push the motor forward, align the driving dog with the rubber coupling, then push the motor fully home.

45. Ensure that the rubber grommet fits correctly into its recess in the casing and has not become trapped.

46. Ensure that the rear face of the mounting plate and the joint face of the motor cover are clean and free from burrs.

47. Apply a thin smear of Wellseal to the faces, fit a new gasket to the mounting plate then fit the motor cover.

48. Fit and tighten the four 2 B.A. nuts and washers.

49. Connect the motor feed and the solenoid feed leads (*see Fig. T153*).

50. Fit the solenoid leads first with the lead ends to the eyelets lowermost.

51. Fit the motor earth and the solenoid connection with the lead to the eyelet uppermost.

52. Fit the motor feed leads to the relays.

53. Examine all connections to ensure that they are all correctly connected.

54. Ensure that the slip ring is positioned with the open circuit sections parallel with the worm shaft, as described earlier.

55. Ensure that the joint faces of the actuator casing and the cover are clean and free from burrs.

56. Apply a thin smear of Wellseal to both faces then fit a new gasket to the casing.

57. Fit the cover and secure it with the eight 2 B.A. nuts and washers.

58. Fit the spring retaining cup onto the output shaft.

59. Liberally apply Rocol M 204 G Ragosine to the inside of the cup and to the output shaft.

60. Smear both ends of the spring with the same lubricant then fit the spring over the shaft and into the cup.

61. Lubricate the spring housing in the lever then fit the lever to the shaft with the lever pointing downward.

62. Smear the detent face of the lever, again using Rocol M 204 G Ragosine.

63. Using tool No. (RH 7843) compress the spring then fit the hardened steel pin.

64. Coat the inside of the cover with the same lubricant, then fit the cover and secure it with a setscrew.

65. To test the lever to ensure that the torque required to make the lever slip is correct, proceed as follows.

66. Operate the lever at least three times in each direction to relieve any initial stiffness.

67. Fit a spring balance to the lever, with one end of the spring balance located in the clevis pin hole in the end of the lever.

68. Move the lever forward until it slips; note the reading on the spring balance.

69. Move the lever in the opposite direction, again noting the reading. The lever should slip at a load of between 60 lb. and 75 lb. (27,2 kg. and 34 kg.).

70. If the load required to move the lever does not comply with the figures quoted, check the spring poundage (*see Dimensional Data at the end of this Section*) then renew either the spring or the lever to obtain the correct slipping load.

71. If rig testing facilities are available, test the actuator to the specification given in 'Dimensional Data' at the end of this Section.

Printed in Great Britain

September 1971

T.S.D. 2476

Gearchange electric actuator—To assemble (Car serial number SRX 9001 and onwards)

1. Press the output shaft bearing into the actuator casing. The bearing should be fitted such that it is slightly proud on both the inside and outside of the casing.

Note This bearing is an oil retaining type and should **not** be soaked in any solvent.

2. Fit the wormshaft bearings to the wormshaft ensuring that the bearings are adequately lubricated with Esso Beacon grease.

3. Assemble the wormshaft and bearings into the actuator case. The bearings must be a slide fit in the casing bores. Adjust the end float of the wormshaft to between 0·002 in. and 0·005 in. (0,005 mm. and 0,012 mm.) using a suitable thickness of packing washer. Fit the circlip.

4. Fit new contact segments to the slip ring. Ensure that the edges of the segments are free of burrs.

5. Fit the slip ring and gear assembly into the main bush checking that the shaft is a slide fit in the bush.

Lubricate the gear teeth with Esso Beacon grease.

Use only the minimum amount of grease as any excess is liable to be thrown off.

6. Fit the thrust washer and circlip to the output shaft.

7. Fit the rubber gaiter, washer and output lever to the shaft. Noting the position of the output lever.

8. Check that the wormshaft can rotate freely. Rotate the wormshaft until the open circuit sections of the slip ring are at 90° to the wormshaft and the flat side of the 'O' section of the output shaft inner end is uppermost.

9. Fit the splined collar and coupling onto the wormshaft.

10. Fit the new sealing ring provided to the groove in the case and pass the motor cables through the hole.

11. Mate the splined collar on the motor shaft with the nylon coupling.

12. Fit the three 0·250 in. (6,35 mm.) motor mounting bolts.

13. Check that the wormshaft is free to rotate.

14. Fit the dual relay provided to the new contact assembly and check the tightness of the 5 B.A. terminal screws on the contact assembly.

Note This dual relay is a precision component and its internal settings can easily be upset by maltreatment.

15. Loosely fit the micro-switches to the contact plate assembly ensuring that the spring washers are fitted under the heads of the long 6 B.A. screws in the slotted holes or under the nuts adjacent to the contact plate in the plain holes.

16. Loosely fit the contact plate assembly into the casing locating the sleeves, if fitted, on the studs and taking care not to damage the relay assembly and guiding the motor feed wires between the casing and the indentation in the contact base plate.

17. Fit the four 3 B.A. nuts and washers to the contact plate and connect the motor feed cables and the suppressor across the relay mounting bolts as shown in Figure T154. All slack in the motor cables should be taken up by rotating the eyelets about the terminal posts.

18. View the layout of the contacts onto the slip ring through the elongated hole in the contact plate and ensure that there is a minimum of 0·50 in. (1,27 mm.) between adjacent contacts as well as being approximately 0·062 in. (1,58 mm.) from either the edge of the segments or the countersinkings for the retaining screws.

19. Fit the rubber gasket and the socket assembly, guiding the cables through the casing and the aperture in the contact plate.

The socket should be fitted so that the locating tong adjacent to pin A is uppermost on the sloping mounting face of the casing.

20. Fit all cables to their respective connections in accordance with Figures T154 and T156.

The longer cables to the contact plate should be fitted first, followed by the shorter cables and finally the micro-switch and relay connection.

If the actuator was fitted with black micro-switches it will be necessary to suitably alter the cable connections to suit the new grey micro-switches provided.

It is helpful to sort out the wires into their respective positions before attachment. It should be noted that when making connections to the 5 B.A. terminal screws on the contact plate extreme care should be used when fitting the terminal securing nuts as if these are tight the first nut on the terminal will be loosened resulting in a poor connection.

Note On the pre-automatic speed control type of actuator the Yellow/black wire is replaced by a Green/black one and the Green/blue wire is deleted.

21. Fit the actuator onto the gearbox mounting bracket and refit the loom plug to the actuator.

Neutral start and height control switches—To remove (Cars prior to car serial number SRX 9001)

1. Remove the split pin and clevis pin which secures the link rod to the switch actuating lever; disconnect the link rod.

2. Disconnect the two leads at the Lucar connections on the detent and stator solenoid case connector; note the position of the leads to ensure correct assembly (*see Fig. T155*).

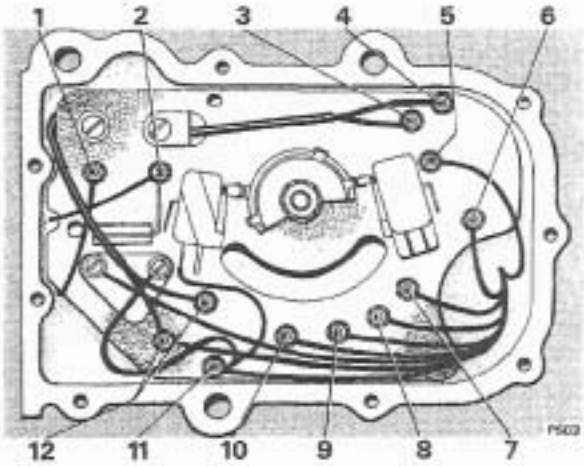

FIG. T154 WIRE CONNECTIONS
(Car Serial Number SRX 9001 and onwards)

1 Blue/green to motor
2 Red/green to motor
3 Red to relay
4 Red to relay
5 Black/brown from plug to terminal P
6 Black/red from plug to terminal R
7 Black/blue from plug to terminal N
8 Black/green from plug to terminal D
9 Black/yellow from plug to terminal I
10 Black/white from plug to terminal L
11 Black from plug to earth terminal
12 Green/black from plug to 'ignition' terminal

3. Remove the two bolts which secure the switch cover to the bracket on the left-hand side of the transmission; remove the cover.

Note Before the switches can be removed from the car, the switch assembly must be partially dismantled and the leads disconnected (*see Neutral start and height control switches — To dismantle*).

Neutral start and height control switches— To dismantle

(Cars prior to car serial number SRX 9001)

If the transmission has been removed from the car, the switch cover will have been removed from the transmission but it will still be connected to the car by the wire leads. Dismantle the switches in the same way as described for dismantling the switches when the transmission is in position in the car.

To dismantle the neutral start and height control switches, proceed as follows.

1. Remove the four screws which secure the cover to the casing.

2. Remove the cover and discard the joint. The gasket is sealed with jointing compound on both sides during initial assembly and this may make separation of the cover and casing difficult. Do **not** use a screwdriver blade between the joint faces otherwise the waterproofing may be impaired.

3. Unscrew the knurled nut at the top of the cover.

4. Unscrew the two 6 B.A. screws which secure the micro-switches to the casing.

5. Remove the switches and separator, disconnect the leads, then remove the leads and rubber grommet from the casing.

6. It should not be necessary to remove the operating cam and shaft which is secured in the casing by the lever. The lever is positioned and secured on the shaft by a roll pin.

Neutral start and height control switches— To assemble

(Cars prior to car serial number SRX 9001)

1. Ensure that the lever and cam assembly is free to rotate.

2. Examine the cork seal and should it require renewal, press out the roll pin using tool No. (RH 7841), remove the lever and washer, then renew the seal. Fit the lever using a new roll pin.

3. If the cam and shaft assembly has been removed from the casing, lubricate the shaft with Rocol M 204 G Ragosine when fitting the shaft to the casing.

4. Feed the leads into the casing then connect them to the micro-switches as shown in Figure T155.

5. Fit the micro-switches and separator to the casing. The insulated separator fits between the two switches.

6. When the cam actuates the switches, ensure that a gap of 0·050 in. (1,27 mm.) exists between the flat on lever and the stop on the cover.

7. Draw the rubber sealing plug down the loom until it fits into the tapered bore in the casing. Tighten the knurled nut.

8. Ensure that the joint faces of the casing and cover are clean and free from burrs then apply a thin smear of Wellseal to both faces.

9. Fit a new gasket to the casing then secure the cover, using four 3 B.A. screws.

Neutral start and height control switches— To fit

(Cars prior to car serial number SRX 9001)

1. Fit the switch to the bracket on the side of the transmission. Torque tighten the nuts.

2. Connect the control rods to both units, then adjust the controls as described in Section T5 – Control Linkage.

3. Fit the leads to the Lucar connections on the detent and stator solenoid (if fitted) connection.

Printed in Great Britain

September 1971

T.S.D. 2476

Neutral start and height control switches—To dismantle

(Car serial number SRX 9001 and onwards)

Refer to Page T199—Gearchange electric actuator—To dismantle.

Neutral start and height control switches—To assemble

(Car serial number SRX 9001 and onwards)

1. Remove the low tension cable from the ignition distributor, switch on the ignition and check that the actuator will select all six gear stations correctly.

2. Move the gear selector lever to 'D' and fit the micro-switch cam to the actuator output shaft. When tightening the 0·250 in. (6,35 mm.) nut, the torque reaction should be taken by gripping the output lever such that the tightening force is not absorbed by the nylon teeth of the wormwheel.

3. Move the gear range selector lever to the 'Park' position.

4. Locate the two micro-switches adjacent to the actuator socket (Neutral start and Height control switches).

Move the switches towards the peak of the cam until the switch plungers are in the centre of the peak and are depressed to within 0·020 in. (0,51 mm.) of the switch body as shown in Figure T157. When both switches are in the correct position, tighten the mounting bolts.

5. Repeat this procedure on the left-hand micro-switch which operates the 'Park' anti-thief device.

6. Select 'Reverse' gear and check that all three switches are clear of the cams.

7. Select 'Neutral' and ensure that the right-hand pair of switch plungers are correctly depressed and that the right-hand micro-switch is clear of the cam.

8. Switch off the ignition and fit the distributor low tension cable.

9. Remove the actuator from the car and fit the casing side cover, painting both sides of the new gasket provided with a suitable jointing compound. Fit the actuator to the transmission, connecting the loom plug and the actuator linkage.

Gearchange actuator motor—To dismantle

(Cars prior to car serial number SRX 9001)

1. Unscrew and withdraw the two through-bolts.

2. Remove the end covers.

3. Withdraw the armature from the drive end. Retain the shim washers which fit between the shoulder on the drive end of the armature shaft and the drive end bush.

4. Note the side and the position of each brush to

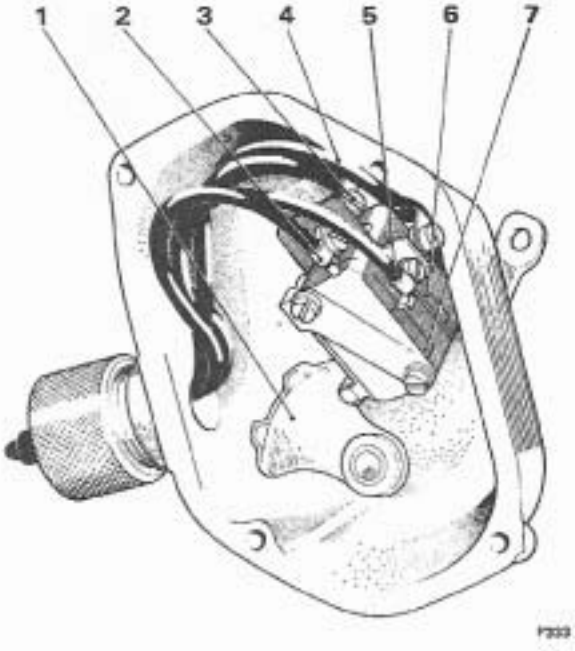

FIG. T155 MICRO-SWITCH CONNECTIONS (Cars prior to Car Serial Number SRX 9001)

1 Actuating cam
2 Red/white lead
3 Green/black lead
4 Green lead
5 White/black lead
6 Height control switch
7 Neutral start switch

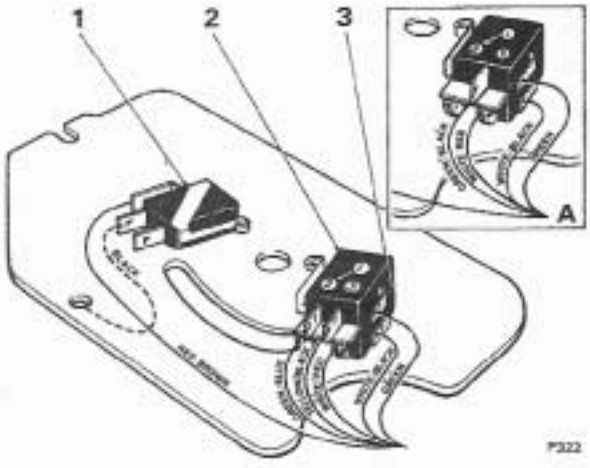

FIG. T156 MICRO-SWITCH CONNECTIONS (Car Serial Number SRX 9001 and onwards)

1 'Park' micro-switch
2 Height control switch
3 Neutral start switch

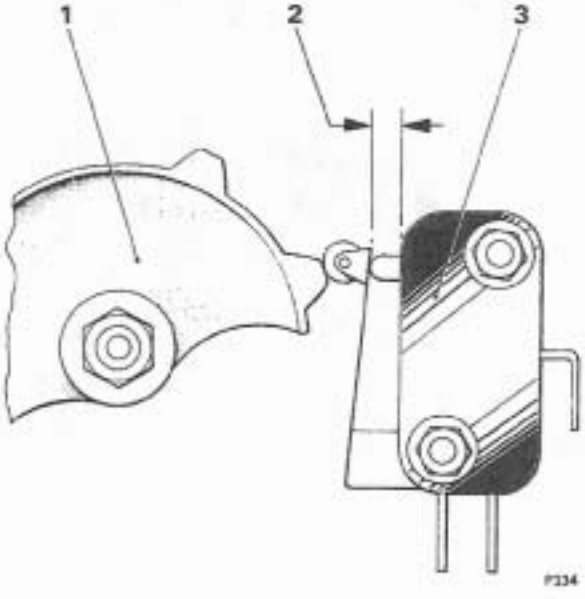

FIG. T157 ADJUSTMENT OF MICRO-SWITCHES (Car Serial Number 9001 onwards)

1 Cam
2 Gap 0.020 in. (0,51 mm.)
3 Micro-switch

ensure correct assembly then remove the brushes, taking care not to stretch excessively the brush tension spring.

5. Should the pole piece require removal, mark the pole piece and the two retaining screws so that they can be fitted in their original positions.

Gearchange actuator motor—To inspect (Cars prior to car serial number SRX 9001)

Under normal operating conditions the gearchange actuator motor should need no attention. The porous bronze bearings are impregnated with oil and the brushes are carbon copper.

Details of motor tests and performance are given in 'Dimensional Data' at the end of this Section.

Gearchange actuator motor—To assemble (Cars prior to car serial number SRX 9001)

Assemble the gearchange actuator motor as follows (*see Fig. T158*).

1. Fit the pole pieces and the two self-tapping screws, ensuring that the marks made during dismantling are correlated.

2. Fit the brushgear assembly, ensuring that the brushes are fitted in their original position. Take care not to overstretch the brush tension springs. Ensure

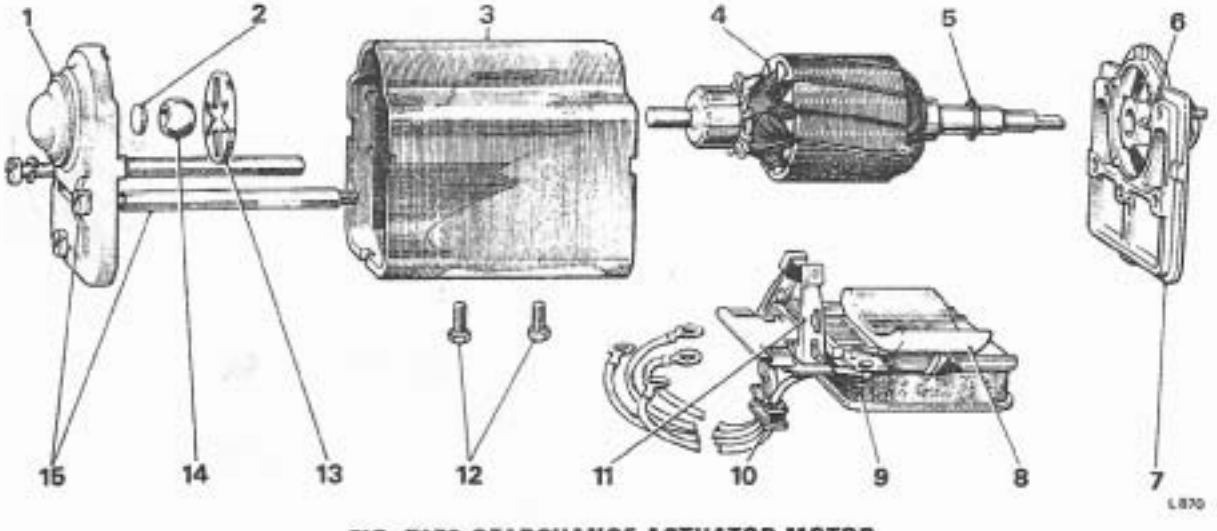

FIG. T158 GEARCHANGE ACTUATOR MOTOR (Cars prior to Car Serial Number SRX 9001)

1 Commutator end bracket
2 Thrust pad
3 Yoke
4 Armature
5 Shim
6 Bearing retainer
7 Drive end bracket
8 Pole piece
9 Field coil
10 Grommet
11 Brushgear
12 Pole piece securing screw
13 Bearing retainer
14 Self aligning bearing
15 Through-bolts and insulators

Printed in Great Britain

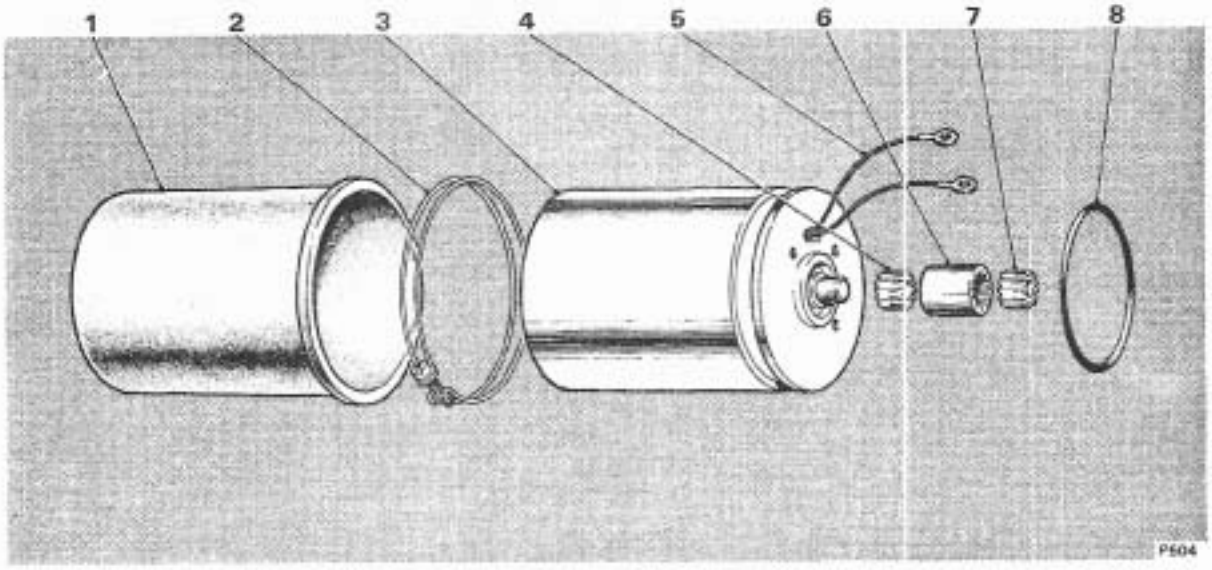

FIG. T159 GEARCHANGE ACTUATOR MOTOR
(Car Serial Number SRX 9001 and onwards)

1 Motor cover
2 Motor cover securing clip
3 Motor
4 Motor flying leads
5 Motor drive shaft
6 Coupling (splined)
7 Splined drive
8 'O' ring

September 1971

that the brush arms pivot freely on the terminal plate locations.

3. Lightly smear the armature shaft with Shell Turbo 41 oil, taking care to prevent any oil from reaching the commutator.

4. Fit the armature.

5. Fit the shim(s) to the drive end of the armature shaft.

6. Fit the end covers and secure them with the through-bolts.

7. Check the end float of the armature. The end float should be between 0·002 in. and 0·012 in. (0,05 mm. and 0,30 mm.). If the end float does not conform to these figures remove the drive end bracket and adjust the shim(s) to suit.

Gearchange actuator motor—To dismantle (Car serial number SRX 9001 and onwards)

1. Using a suitable puller remove the drive gear from the motor.

2. Unscrew and withdraw the 2 bolts securing the motor housing, remove the housing.

3. Remove the armature from the end plate.

Gearchange actuator motor—To inspect (Cars serial number SRX 9001 and onwards)

1. Examine the magnets for any damage, cracks or fractures.

2. Examine the brushes for wear; fit new brushes if necessary.

3. Examine the armature commutator for wear or damage, if scored polish with fine emery cloth. If scores are heavy and cannot be removed with light polishing, fit a new armature.

4. After polishing carefully clean commutator slots to remove particles of carbon.

5. Examine bearing bushes for wear, replace if necessary.

6. Examine the armature shaft for wear on the bearing diameter.

Gearchange actuator motor—To assemble (Car serial number SRX 9001 and onwards)

Assemble the actuator motor (*see Fig. T159*) by reversing the proceeds given previously. Test the motor after assemble, if the current consumption exceeds 7·5 amps. the armature has an electrical fault and should be renewed.

T.S.D. 2476

DIMENSIONAL DATA FOR GEARCHANGE ACTUATOR, NEUTRAL START AND HEIGHT CONTROL SWITCHES

DESCRIPTION	DIMENSION		PERMISSIBLE WORN DIMENSION	REMARKS
Output shaft bearing bush i/d.	0·6273 in. (15,932 mm.	— 0·001 in. — 0,025 mm.)	—	The bush is oil impregnated phosphor bronze and should not be cleaned with a degreasing agent.
Output shaft o/d.	0·6245 in. (15,863 mm.	— 0·0005 in. — 0,013 mm.)	—	—
Clearance.	0·0018 in. (0,045 mm.	to 0·0033 in. to 0,083 mm.)	—	—
Front bearing bore — actuator casing.	0·7480 in. (19,0 mm.	+ 0·0005 in. + 0,013 mm.)	—	—
Front bearing o/d.	0·7480 in. (19,0 mm.	— 0·0004 in. — 0,010 mm.)	—	—
Clearance.	0·000 in. (0,00 mm.	to 0·0009 in. to 0,023 mm.)	—	—
Rear bearing bore — actuator casing.	0·7497 in. (19,041 mm.	+ 0·0005 in. + 0,013 mm.)	—	—
Rear bearing o/d.	0·7497 in. (19,041 mm.	— 0·0004 in. — 0,010 mm.)	—	—
Clearance.	0·000 in. (0,00 mm.	to 0·0009 in. to 0,023 mm.)	—	—
Front bearing i/d.	0·2362 in. (6 mm.	— 0·0004 in. — 0,010 mm.)	—	—
Worm shaft front bearing diameter.	0·2363 in. (6,001 mm.	— 0·0005 in. — 0,013 mm.)	—	—
Interference or clearance.	0·0005 in. tight to 0·0004 in. clear (0,013 mm. tight to 0,010 mm. clear)		—	—
Rear bearing i/d.	0·250 in. (6,35 mm.	+ 0·0002 in. + 0,005 mm.)	—	—
Worm shaft rear bearing diameter.	0·250 in. (6,35 mm.	— 0·0005 in. — 0,013 mm.)	—	—
Interference or clearance.	0·0002 in. tight to 0·0007 in. clear (0,005 mm. tight to 0,018 mm. clear)		—	—
Brake drum — shaft diameter.	0·2485 in. (6,312 mm.	+ 0·0005 in. + 0,013 mm.)	—	—
Wormshaft — drum diameter.	0·2485 in. (6,312 mm.	— 0·0005 in. — 0,013 mm.)	—	—
Interference or clearance.	0·000 in. tight to 0·001 in. clear (0,000 mm. tight to 0,025 mm. clear)		—	—
Worm gears backlash.	0·002 in. (0,05 mm.	to 0·007 in. to 0,18 mm.)	—	—
Worm shaft end float.	0·002 in. (0,05 mm.	to 0·005 in. to 0,13 mm.)	0·005 in. (0,13 mm.)	Adjust end float by selecting suitable adjusting washer.
Motor armature end float.	0·002 in. (0,05 mm.	to 0·012 in. to 0,03 mm.)	0·012 in. (0,03 mm.)	Adjust end float by selecting suitable adjusting washer.
Pressure of brushes on commutator.	4·4 oz. (125 g.	to 5·6 oz. to 160 g.)	—	Renew spring or brushes to maintain pressure.
Solenoid brake spring — free length.	1·287 in. (approx.) (32,69 mm.) (approx.)		—	—
Load required to compress spring to a length of 1·045 in. (26,55 mm.)	6 lb. 8 oz. (2,95 kg.	to 7 lb. to 3,18 kg.)	—	—

Printed in Great Britain
September 1971
T.S.D. 2476

DESCRIPTION	DIMENSION	PERMISSIBLE WORN DIMENSION	REMARKS
Dimensional Data—continued			
Operating spring free length.	1·00 in. (approx.) (25,4 mm.) (approx.)	——	——
Load required to compress spring to a length of 0·70 in. (17,8 mm.)	100 lb. (45,4 kg.)	——	——
2 B.A. half nuts — motor to mounting plate.	Torque tighten to between 30 lb.in. and 36 lb.in. (0,34 kg.m. and 0,41 kg.m.)	——	——
Remainder of 2 B.A. nuts.	Torque tighten to between 48 lb.in. and 60 lb.in. (0,55 kg.m. and 0,69 kg.m.)	——	——
Pole piece screws.	Torque tighten to between 6 lb.ft. and 8 lb.ft. (0,83 kg.m. and 1,11 kg.m.)	——	——
Bolts — actuator to rear extension.	Torque tighten to between 16 lb.ft. and 18 lb.ft. (2,21 kg.m. and 2,49 kg.m.)	——	——

ACTUATOR MOTOR TEST DATA

	Cars prior to Car Serial Number SRX 9001	Car Serial Number SRX 9001 and onwards
Nominal operating voltage	12.	12.
Torque developed in either direction of armature rotation at 20°C.	40 oz. in. at 200 r.p.m. (min.) at 16·5 amp. (max.) and 20 oz. in at 700 r.p.m. (min.) at 14·5 amp. (max.)	50 oz. in. (min) at 200 r.p.m. at 8 amp. (max.) and 12·5 oz. in. (min.) at 1 000 r.p.m. at 2·75 amp. (max.)

DUAL RELAY TEST DATA

	Cars prior to Car Serial Number SRX 9001	Car Serial Number SRX 9001 and onwards
Contact gap	0·020 in. to 0·025 in. (0,51 mm. to 0,64 mm.)	0·025 in. to 0·030 in. (0,64 mm. to 0,76 mm.)
Core gap (contacts open)	0·030 in. to 0·035 in. (0,76 mm. to 0,89 mm.)	0·040 in. to 0·045 in. (1,02 mm. to 1,14 mm.)
Contact pressure (closed)	5·1 oz. to 6·8 oz. (145 g. to 195 g.)	3·5 oz. min. (100 grms. min.)
Cut-in volts	4 volts to 9 volts	9 volts max.
Drop-off volts	2·5 volts (min.)	——
Relay winding resistance	17 ohms. to 19 ohms. (at 20°C.)	17·5 ohms. to 20 ohms. (at 20°C.)

Cars prior to car serial number SRX 9001

The volt drop across the contacts should not exceed 100 milli-volts when a current of 10 amps. is flowing through them and the relay coil is supplied with a nominal 12 volts.

Car serial number SRX 9001 and onwards

The volt drop across the contacts should not exceed 50 milli-volts when a current of 6 amps. is flowing through them and the relay coil is supplied with a nominal 12 volts.

ACTUATOR TEST DATA
(All cars)

Voltage required to operate actuator — temperature range 70°C. to minus 17·8°C.	9 volts (min.)
Time taken to rotate a 2 in. (50,8 mm.) lever through 80° 15' with a torque of 15·0 lb. in. (0,17 kg.m.) applied to the lever	1·5 seconds (max.)

With 9 volts applied at the motor and an ambient temperature of 20°C. the stall torque on the end of the lever must be 40 lb. in. (0,46 kg.m.).

With 12 volts applied at the motor and an ambient temperature of 20°C. the stall torque on the end of the lever must be 70 lb. in. (0,81 kg.m.).

With 12 volts applied to the motor and 10 lb. in. (0,12 kg.m.) load applied to the lever the actuator must select to within 3° of the correct position.

With 14 volts applied at the motor and no load on the lever, the actuator must not 'hunt' between selector positions. It is permissible for the lever to move slightly past a selected position then return to that position before halting. It is not permissible for the actuator lever to move forward and backward past the selected position before finally halting in the position required.

SOLENOID TEST DATA
(Cars prior to car serial number SRX 9001)

Voltage required to withdraw plunger against spring loading from a set distance of 0·075 in. (1,91 mm.) ...	5·0 volts (max.)
Voltage required to hold plunger back against spring pressure	1·0 volts (min.)

Note When the plunger and solenoid assembly has been satisfactorily tested the components should be kept together and fitted as a complete unit.

Printed in Great Britain

September 1971

T.S.D. 2476

Section T8
REMOTE GEARCHANGE SELECTOR

The remote gearchange selector is clamped to the steering column assembly just below the steering wheel.

An exploded view of the selector is shown in Figures T160 and T161.

Movement of the selector lever moves a pointer over an indicator scale which is marked 'P', 'R', 'N', 'D', 'T' and 'L' representing Park, Reverse, Neutral and three forward gear ranges.

The selector is in the form of a switch. When the lever is moved from Neutral, an electrical signal is transmitted to the electric actuator which is mounted on the transmission rear extension and connected to the gearchange lever on the transmission. On receiving the signal, the electric actuator will automatically select the required gear range. The transmission will remain in the selected range until the lever is again moved.

The electric actuator is wired so that, should the driver stop the car in a gear other than 'Park' then switch off the engine, he can still lock the transmission by moving the selector lever to the 'Park' position.

Having done this, if he moves the selector lever out of this position or the lever is accidentally moved to a drive position, the actuator will not respond until the ignition is switched on.

Remote gearchange selector—To remove

1. Remove the screws retaining the upper and lower halves of the cowling. These halves should always be retained as a set. Carefully remove the upper half of the cowling.
2. Remove the screw retaining the lower half of the cowling to its clamping bracket; remove the lower half of the cowling.
3. Disconnect the indicator lamp.
4. Disconnect the micro-switch.
5. Remove the screw securing the switch insulating plate.
6. Remove the gearchange selector.

Remote gearchange selector--To dismantle

1. Remove the screws securing the micro-switch(es) to the rear face of the base assembly and remove the micro-switch(es).
2. Remove the operating arm from the spindle of the quadrant.
3. Remove the single 5 B.A. screw securing the pointer to the quadrant boss and remove the pointer; take care not loose the washer(s) from beneath the head of the 5 B.A. screw.

Note Care must be taken not to scratch the pointer or the indicator scale.

4. Remove the two 5 B.A. screws and shake-proof washers securing the indicator support bracket to the two bosses on the base assembly, then remove the indicator support bracket assembly.
5. Remove the two hexagon-headed 3 B.A. screws securing the gate assembly to the underside of the base.
6. Remove the circlip, clevis pin and spring securing the gearchange selector lever to the quadrant, then remove the lever with the gate assembly attached.

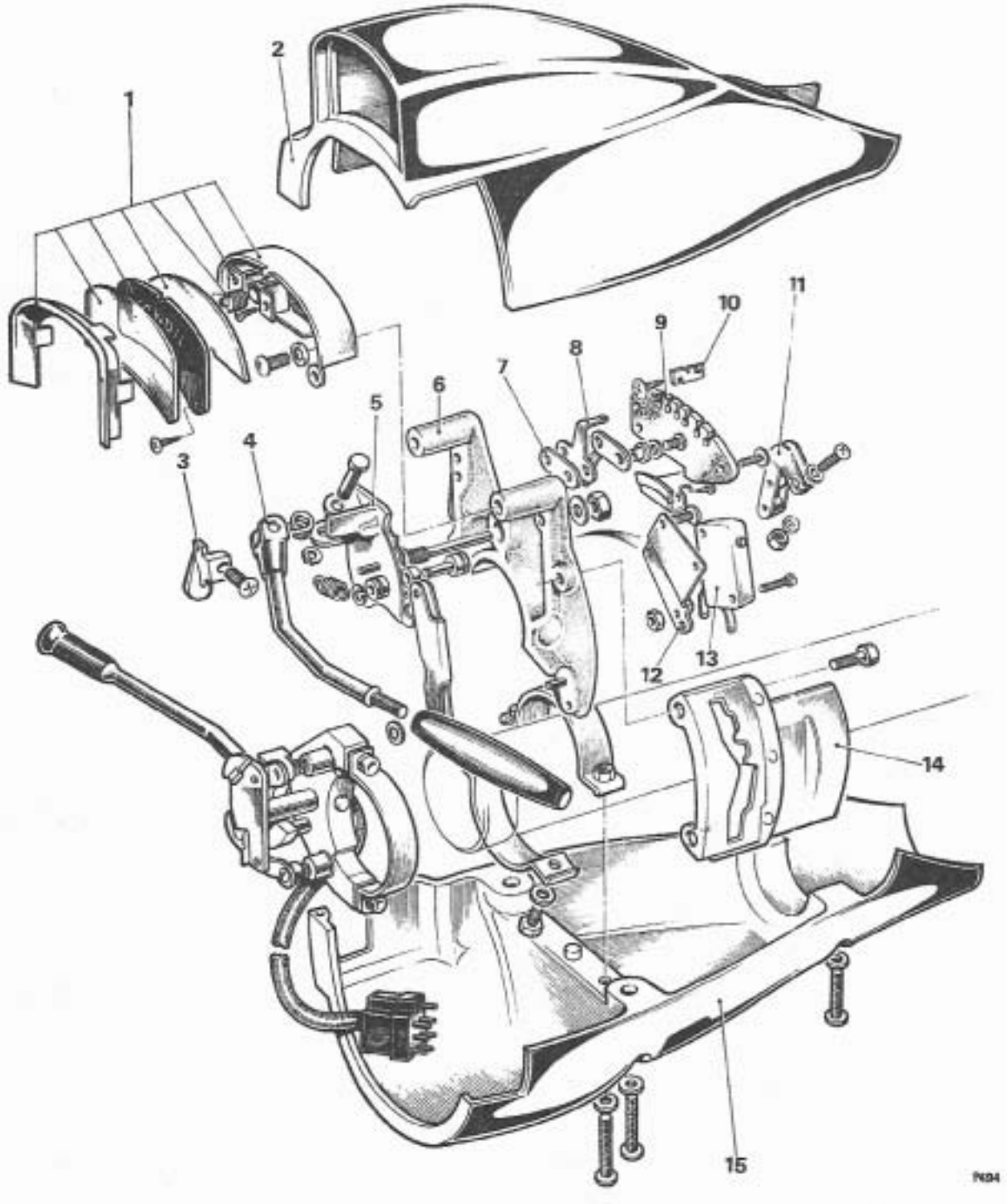

FIG. T160 REMOTE GEARCHANGE SELECTOR (EARLY CARS)

Printed in Great Britain

September 1971

T.S.D. 2476

FIG. T160 REMOTE GEARCHANGE SELECTOR (EARLY CARS)

1 Gear position indicator scale components
2 Upper half of steering column cowl
3 Pointer — gear range selector
4 Gear range selector lever
5 Quadrant assembly
6 Base assembly
7 Insulating piece
8 Spring — contact — gear range selector
9 Insulating plate
10 Contact
11 Reverse lamps operating lever
12 Micro-switch mounting plate — reverse lamps
13 Micro-switch — reverse lamp
14 Support assembly bracket
15 Lower half of steering column cowl

7. Remove the two 5 B.A. screws and washers securing the phosphor-bronze contact, two insulating strips and two insulating dowels to the quadrant and remove these items.

8. Remove the retaining clip from the rocking arm.

9. Remove the tension spring from the rocking arm and quadrant, and remove the rocking arm assembly.

10. Remove the eccentric stud which forms the rocking arm assembly pivot.

11. Remove the ¼ in. UNF nut and washer from the quadrant spindle and remove the quadrant assembly from the base assembly.

Remote gearchange selector—To assemble

1. Fit the quadrant assembly onto the base and nip the ¼ in. UNF nut and washer onto the spindle. Check that the quadrant is free to rotate.

2. Remove the quadrant and lubricate the spindle with Ragosine 204G. Refit the quadrant and finally tighten the ¼ in. UNF nut.

3. Do not overtighten the nut, since the bearing boss tends to spread slightly and a tight bearing may be formed.

4. Fit the eccentric stud to the base plate, fit the retaining nut and temporarily tighten.

5. Temporarily fit the gear change selector lever and the gate; ensure that when the roller lines up with the quadrant, the selector lever seats in the correct position in the gate. Adjust by rotating the eccentric stud.

6. Tighten the stud retaining nut.

7. Fit the rocking arm assembly, then check to ensure that the roller lines up correctly with the quadrant with respect to height above the base.

8. Remove the selector lever and gate.

9. Remove the rocking arm and hook the tension spring onto the anchor pin roller on the underside of the quadrant and onto the spring anchor on the underside of the rocking arm.

10. This operation is made easier by rotating the quadrant anti-clockwise beyond its normal travel, so that the spring is not under tension. Rotate the quadrant clockwise whilst holding the rocking arm clear, then allow the roller to locate on the detent forms. Fit the spring on the top side of the quadrant and rocking arm.

11. Fit the circlip.

Note Do not fit the pivot retaining clip to the rocking arm at this stage. (They are difficult to remove, should the need arise).

12. Move the quadrant to a mid-way selection and fit the phosphor-bronze contact. This contact is assembled between two insulating strips and all are located by two insulating dowels. This sandwich assembly is then secured to the quadrant by two 5 B.A. screws and washers.

Note Extreme caution must be taken with the moving contact, so that it is not bent or damaged in any way. This contact has a deflection imposed upon it by fitting the fixed contacts and it is **extremely important** that the pressure between the contacts which the deflection produces is correct (*see Remote gearchange selector – To test*).

13. Before fitting the selector lever assembly carry out the following checks.

14. Check that the clevis pin will slide through both the fork end on the lever and the holes in the mounting bosses on the quadrant, then check that the fork end will slide between these bosses.

15. Lightly smear Ragosine 204G on the outside of the fork end, the inside of the bosses, the clevis pin and the clevis pin holes, then locate the fork end in the bosses by the clevis pin and fit the spring inside the fork end and over the clevis pin.

16. Push home the pin and fit the circlip and washer.

17. Check that the lever will return easily under the load of the spring.

18. Fit the retaining clip to rocking arm pivot.

19. Fit the bulb holder and support bracket.

20. Secure the gate assembly to the underside of the base by means of the two hexagon-headed 3 B.A. screws.

21. Check that, when the position of the lever is controlled by the detents, it lines up with the profile of the gate liner and that the extreme positions of the lever are not limited by the gate.

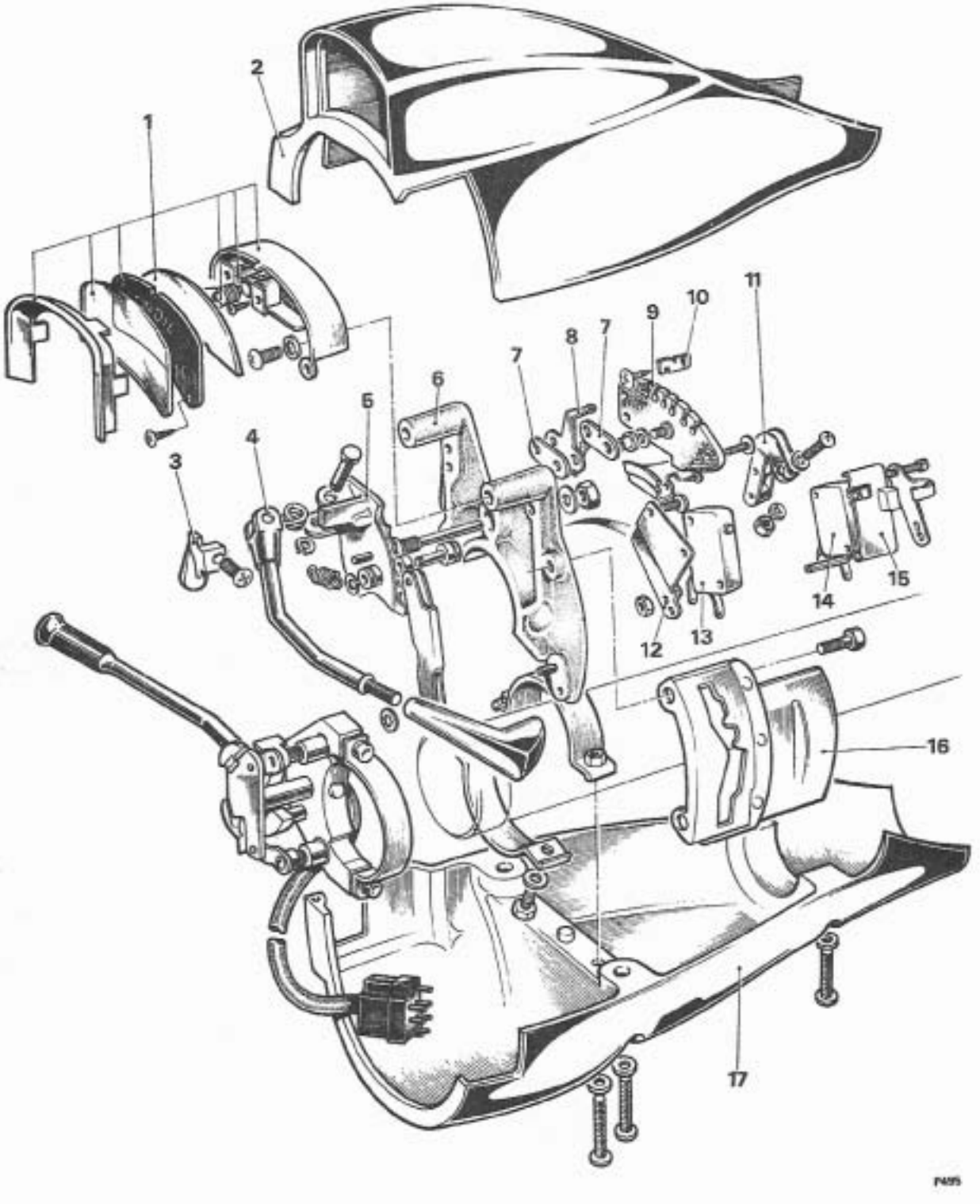

FIG. T161 REMOTE GEARCHANGE SELECTOR (LATER CARS)

Printed in Great Britain

September 1971

T.S.D. 2476

FIG. T161 REMOTE GEARCHANGE SELECTOR (LATER CARS)

1 Gear position indicator scale components
2 Upper half of steering column cowl
3 Pointer — gear range selector
4 Gear range selector lever
5 Quadrant assembly
6 Base assembly
7 Insulating piece
8 Spring — contact — gear range selector
9 Insulating piece
10 Contact
11 Reverse lamps operating lever
12 Micro-switch mounting plate — reverse lamps
13 Micro-switch — reverse lamps
14 Micro-switch — fast-idle
15 Lever and buffer assembly
16 Support assembly bracket
17 Lower half of steering column cowl

22. Fit the insulating plate complete with the feed and supply contacts fitted to it.

23. When the unit is screwed down by the three 5 B.A. screws, check that the inside leg of the moving contact is pressing onto the supply contact and that at the extremities of its travel the hemispherical head is still making good contact with supply contact (*see Remote gearchange selector — To test*).

24. Each selection should then be made in turn, checking that the outside leg on the moving contact lines up correctly with each of the feed contacts.

25. Mount this assembly on the two bosses on the base by means of the two 5 B.A. screws and shake-proof washers.

26. Fit the blue filter with its flattened end in front of the bulb and behind the bracket mounting screw heads. Bend the top radiused end over the bulb and check that it follows the contours of the support bracket.

27. Hold the filter in this position by means of a 0·025 in. (0,64 mm.) feeler gauge held from the front of the unit, fit the indicator scale over the support bracket and secure it with two self-tapping screws. The scale should drop onto the bracket and its lip must not be forced down.

28. Feed the pointer under the indicator scale, then with 'I range' selected, use a thin-bladed Phillips head screwdriver, to feed the single 5 B.A. screw through the pointer leg and screw it into the quadrant boss. Care should be taken not to scratch either the pointer or the indicator scale.

29. Each selection should then be made and the alignment of the pointer checked. Packing washers fitted to the 5 B.A. screw will give the adjustment necessary to correctly 'line-up' the pointer.

30. Screw the micro-switch onto the two bosses on the rear face of the base assembly.

31. Fit the operating arm onto the spindle of the quadrant.

32. **On an early car, not fitted with refrigeration** set the operating arm so that the single micro-switch is depressed when the selection is 'R'.

33. **On a car fitted with refrigeration** the two micro-switches require setting so that the fast-idle micro-switch is depressed just as the selector is engaging 'N'.

34. Check that the 'R' micro-switch is operated satisfactorily. The screw is 5 B.A., therefore it should not be overtightened.

35. Fit the retaining clip to the rocking arm pivot.

36. Lightly smear Ragosine 204G on the quadrant detents, then operate the switch several times to ensure that the Ragosine is spread evenly.

Remote gearchange selector—To fit

1. Fit the remote gearchange selector onto the steering column, locating the dowel in the hole in the column outer tube. The two ¼ in. UNF screws which pass through the clamping bracket and into the base are fitted with spring washers.

2. Connect the selector switch and the micro-switch wiring so that the looms leave clearance for fitting the cowling.

3. Fit the lower half of the cowling onto its clamping bracket then fit the upper half of the cowling.

Note Care must be taken when tightening the cowling retaining screws, since the unit, being made of plastic, will crack if over-stressed.

4. Check the clearance between the steering wheel hub and the cowling.

Remote gearchange selector contacts—To set

Whenever the moving or fixed contacts have been disturbed or after the remote gearchange selector have been dismantled and assembled always test the assembly as follows:

When the remote change selector is assembled on the production line the moving contact is shaped such that fitting the fixed contact insulating plate against its machined stops deflects the fixed contact by between 0·050 in. and 0·100 in. (1,27 mm. and 2,54 mm.). This produces the correct pressure between

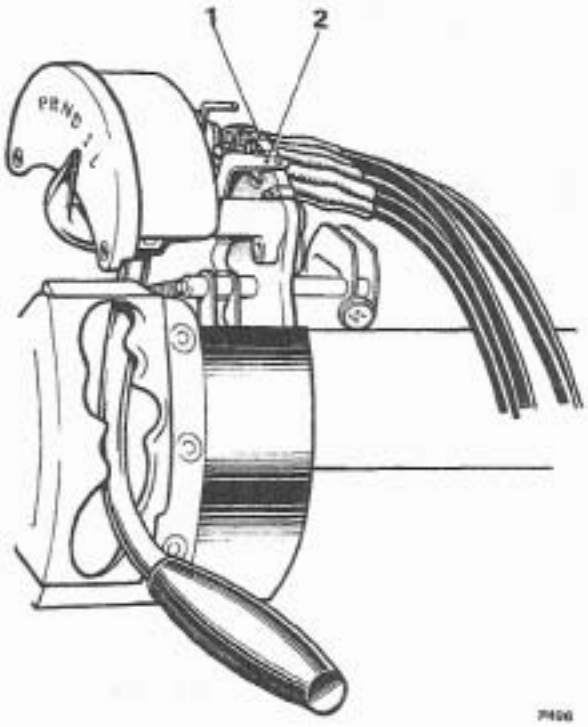

FIG. T162 MOVING AND FIXED CONTACTS (FRONT VIEW)

1 Stationary contacts
2 Moving contacts

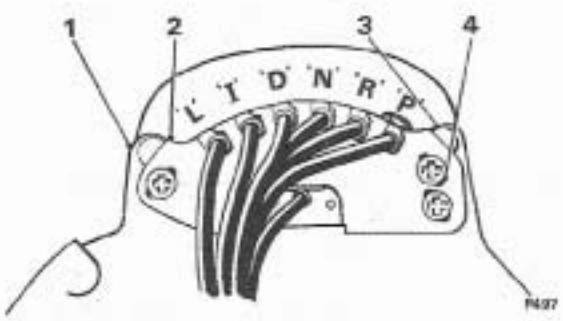

FIG. T163 MOVING AND FIXED CONTACTS (REAR VIEW)

1 Casting
2 Insulating plate
3 Stop — to which insulating plate (2) must abut
4 Elongated hole

the two contacts and is checked in the following procedure using a 0·001 in. (0,025 mm.) thick piece of paper (e.g. cigarette paper or typists carbon paper). The pressure is correct when the paper is 'nipped' by the contacts. What constitutes sufficient degree of 'nip' can be established by assessment on a car that has had its contacts correctly set.

1. Ensure the handbrake is applied and the ignition switch turned to the 'Lock' position.
2. Remove the top half of the steering column cowl.

Note On Corniche cars it may be found necessary to slacken the two screws retaining the lower half of the cowl in order that the top half be removed without damage.

3. Operate the selector lever and ensure that when the lever is in its detent for all of the 'P', 'R', 'N', 'D', 'I', and 'L' positions, the moving contact is positioned on the relevant fixed contact.

Note Radial adjustment of the fixed contact insulating plate is provided by elongated holes used to attach it to the casting (*see Fig. T163*).

4. Check that the moving contact is exerting sufficient pressure on each of the fixed contacts by feeling the amount of 'nip' on a 0·001 in. (0,025 mm.) thick piece of paper placed between the contacts.
5. Carefully remove the paper without lifting the moving contact.
6. If this check reveals insufficient contact pressure on any of the fixed contacts ensure that the insulating plate is in its uppermost position. This is when the plate end stops are touching the machined lugs as shown in Figure T163.
7. When adjustment is necessary the contact pressure should be rechecked after this has been carried out.
8. If the contact pressure is still too low it will be necessary to reshape the moving contact such that the deflection produced when fitting the fixed contact insulating plate against its stops is between 0·050 in. and 0·100 in. (1,27 mm. and 2.54 mm.).

Note The fixed contact insulating plate **MUST** be removed when reshaping the moving contact.

9. Ensure that the moving contact is not running on the edge of the fixed contacts.
10. Fit the steering column cowl and test the assembly.

Remote gearchange selector—To test

1. Switch on the ignition with the gear range selector in 'P'.
2. Move the selector slowly to 'R', 'N', 'D', 'I' and 'L' ensuring that the transmission responds correctly by listening for its operation at each position.

3. Select 'P' and 'N' in turn and check that the engine will start.
4. Switch off the engine and select 'R', 'D', 'I', 'L' and at each position ensure that the engine will **NOT** start.
5. Refit the top half of the steering column cowl.
6. With **CARE** ensure that the car:

(i) Reverses when 'R' is selected.
(ii) Parks when 'P' is selected.
(iii) Drives forward when 'D', 'I', 'L' are selected.

Note These checks to be done first by slow deliberate selection of each gear position and secondly by fast operation of the gear selector.

Printed in Great Britain

September 1971

T.S.D. 2476

Printed in Great Britain
September 1971
T.S.D. 2476

Section T9
TRANSMISSION—TO REMOVE AND FIT

Transmission—To remove

The following procedure is applicable to **all cars** fitted with the Torque Converter Transmission except where divided for either **early** or **later cars.**

1. Drive the car onto a ramp or over a pit; this will enable the transmission to be lowered as it is removed from the car.
2. Ensure that both front road wheels and one rear road wheel are suitably 'chocked' to prevent the car moving.
3. Switch on the ignition and select the 'Neutral' position with the gearchange selector lever; this will ensure that the transmission and propeller shaft are not 'locked' in the 'Park' position.
4. Switch off the ignition and remove the transmission thermal cut-out from the fusebox; refer to the fuseboard identification plate for location.
5. Disconnect the negative lead from the battery, situated in the luggage compartment.
6. Jack up the 'un-chocked' rear road wheel to enable the propeller shaft to be rotated.
7. Disconnect and remove the propeller shaft (*see Propeller shaft — To remove, Chapter F, Section F1*).
8. Lower the rear road wheel of the car and suitably 'chock' as the other three road wheels.
9. Raise the bonnet.
10. Drain the engine coolant (*see Cooling system — To drain, Chapter L, Section L1*).
11. Drain the transmission fluid (*see Section T2 — Servicing*).
12. Remove the dipstick and filler tube. Blank off the hole in the sump to prevent any remaining transmission fluid from running out as the transmission is removed.
13. Disconnect the speedometer cable from the transmission case. Suitably mask both transmission connection and cable end to prevent the ingress of dirt.
14. Unscrew and remove the multi-pin plug from the socket on the gearchange actuator. Suitably mask both the actuator connection and cable end to prevent the ingress of dirt.
15. On **early cars,** remove the nuts and washers securing the neutral start and height control switches to the mounting bracket on the side of the transmission case.
16. Tie the switch and lead assembly to a convenient point so that it will not be damaged.
17. Remove the Lucar connection from the solenoid connection on the side of the transmission case. On **early cars** note the colour of the leads to assist correct assembly; there are two leads, one to the detent solenoid and the other to the stator solenoid. On **later cars** there is only one (Green/white) wire to the side of the transmission case and this operates the detent solenoid. Tie the lead to a convenient point so that it will not be damaged.
18. Disconnect and remove the actuator breather pipe. On **later cars** also disconnect the flexible tube end of the breather from the adapter in the crossmember. Mask all open connections.

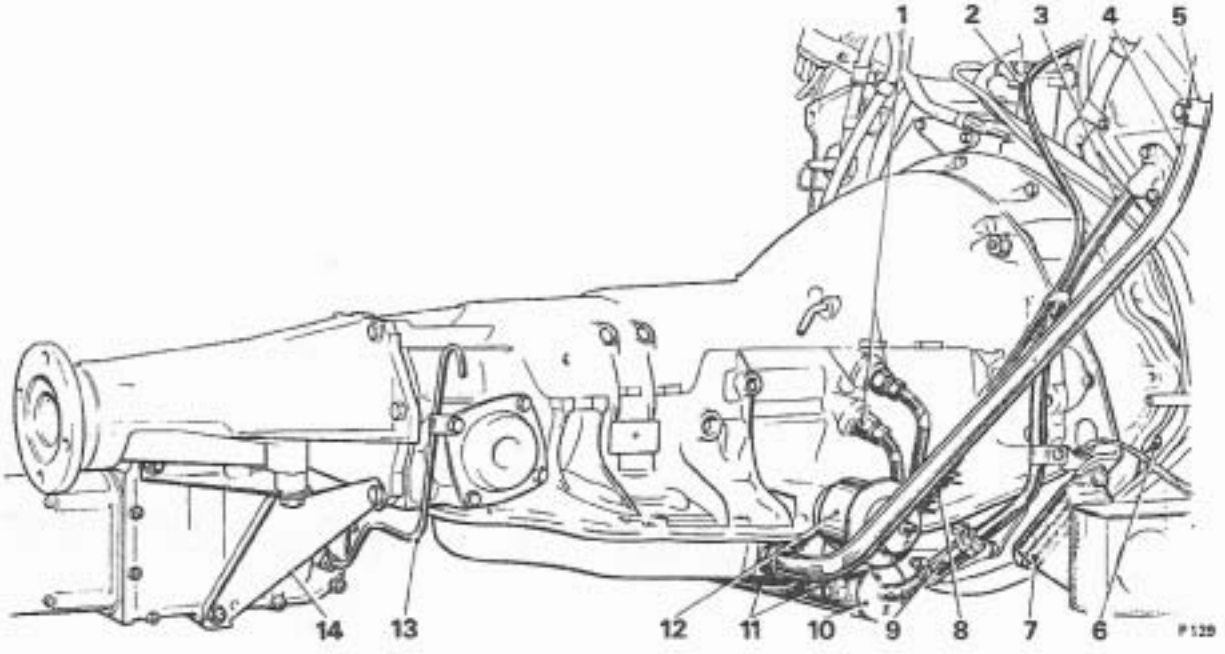

FIG. T164 TRANSMISSION DISCONNECTING POINTS—OFF-SIDE (EARLY CARS)

1 Transmission fluid feed and return pipes
2 Vacuum pipe
3 Coolant feed pipe to heat exchanger
4 Dipstick and filler tube
5 Dipstick and filler tube clip
6 Starter motor bottom bolt
7 Right-hand flexible mount
8 Vacuum pipe connection
9 Coolant pipe connection
10 Heat exchanger
11 Transmission fluid pipes (heat exchanger end)
12 Vacuum modulator
13 Electric actuator breather pipe
14 Actuator mounting brackets

19. Disconnect and remove the various operating rods and levers from the side of the transmission case (*see Figs. T165 and T167*).

20. Remove the three bolts which secure the actuator to the rear extension; remove the actuator.

21. Disconnect the throttle operating rod (*see Figs. T139, T140 and T141 — Control rod — accelerator to compensator linkage*), at the compensating linkage. On right-hand drive cars, also disconnect the throttle operating rod at the lower end and remove the complete rod. On left-hand drive cars, remove the setscrews which secure the accelerator cross-shaft brackets to the underside of the body; remove the brackets, shaft, levers and rods, including the rod connecting the accelerator lever to the cross-shaft lever.

22. Remove the starter motor (*see Starter motor — To remove, Chapter M, Section M4*).

23. Disconnect the vacuum modulator pipe at the modulator end and at the induction manifold; remove the pipe and mask the open connections.

24. On **early cars,** disconnect the two short rubber hoses, one on each side of the heat exchanger.

Note There will be coolant in the heat exchanger and associated pipes which will not drain until the rubber hoses are disconnected. Therefore, it is advisable for the operator to ensure that a suitable container is available.

25. On **early cars,** disconnect the heat exchanger coolant feed pipe from the rear of 'A' bank cylinder head. Remove the various clips and bolts which secure the coolant pipe to the transmission and the vacuum pipe; remove the coolant pipe. Disconnect the coolant return pipe from the junction above 'B' bank rocker cover. Remove the various clips and bolts which secure the coolant return pipe; remove the pipe.

26. On **early cars,** disconnect and remove the heat exchanger transmission fluid pipes; these are located on the dipstick side of the transmission. Remove the setscrews which secure the heat exchanger to the bell

Printed in Great Britain
September 1971
T.S.D. 2476

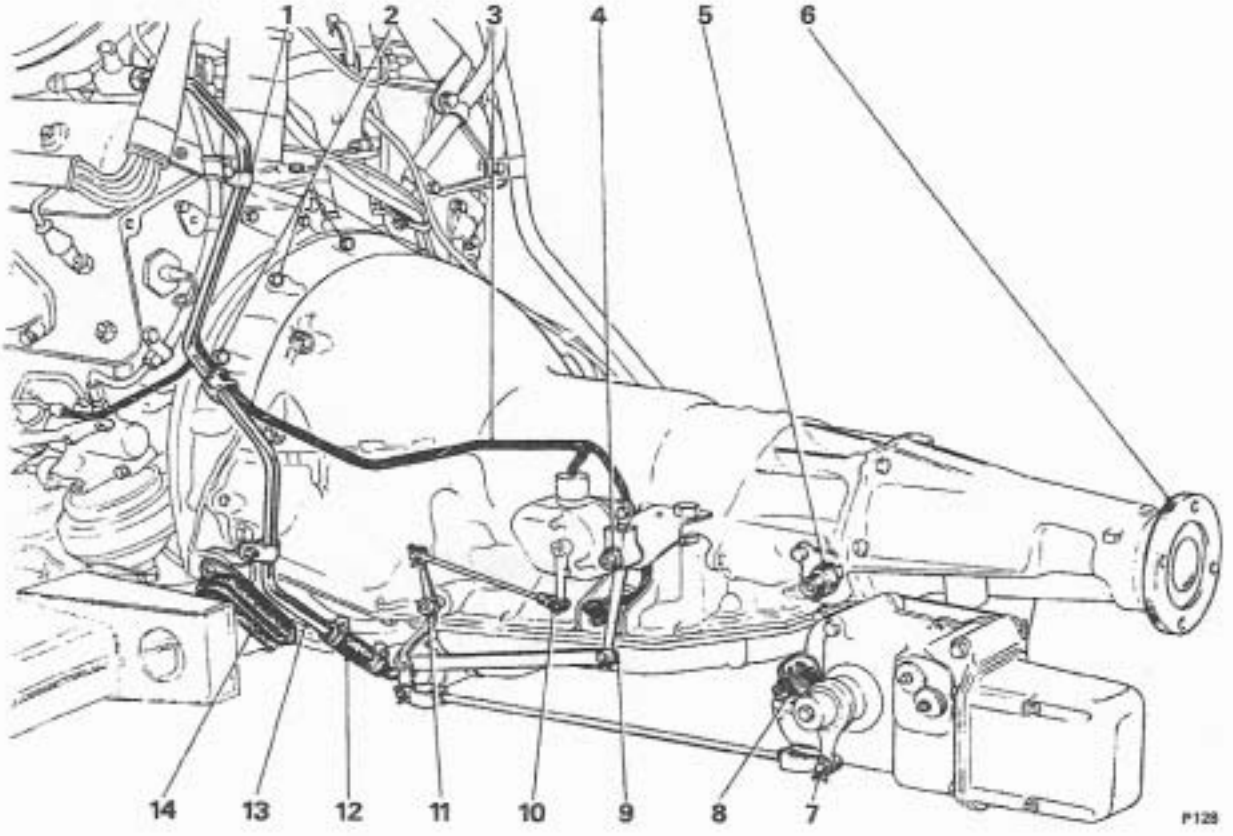

FIG. T165 TRANSMISSION DISCONNECTING POINTS—NEAR-SIDE (EARLY CARS)

1 Coolant return pipe clip
2 Transmission top securing setscrews
3 Micro-switch and solenoid leads
4 Emergency (get-you-home) lever
5 Speedometer drive
6 Coupling flange
7 Actuator lever clevis pin
8 Jack plug socket
9 Detent and stator lead contents
10 Micro-switch lever clevis pin
11 Gearchange lever lock-nut
12 Heat exchanger cooling connection
13 Heat exchanger coolant return pipe
14 Near-side flexible mount

housing bottom cover; remove the heat exchanger and mask the open connections.

27. On **later cars,** disconnect the two transmission fluid flexible pipes leading to and from the heat exchanger situated in the engine coolant radiator. The pipes should be disconnected at a point by the dipstick side of the transmission case where the flexible pipe joins the solid metal pipe.

Note There may be a small quantity of transmission fluid in the pipes which will drain out when the pipes are disconnected, therefore, ensure a suitable container is available.

28. Remove the setscrews which secure the front cover plate and the bell housing bottom cover; remove the plate and cover.

29. Remove the setscrews which secure the engine flexplate to the torque converter.

Note Take care when turning the torque converter to reach the setscrews; do not lever on the flexplate or starter ring as they may become damaged.

30. On **early cars** the transmission is secured to the adapter plate by through bolts and therefore, the adapter plate must be removed with the transmission. **In these instances proceed as follows.**

31. Position a jack under the rear of the engine sump. Ensure that the load is spread evenly by placing a piece of soft wood between the sump and the head of the jack.

32. Raise the jack to take the weight of the engine and transmission.

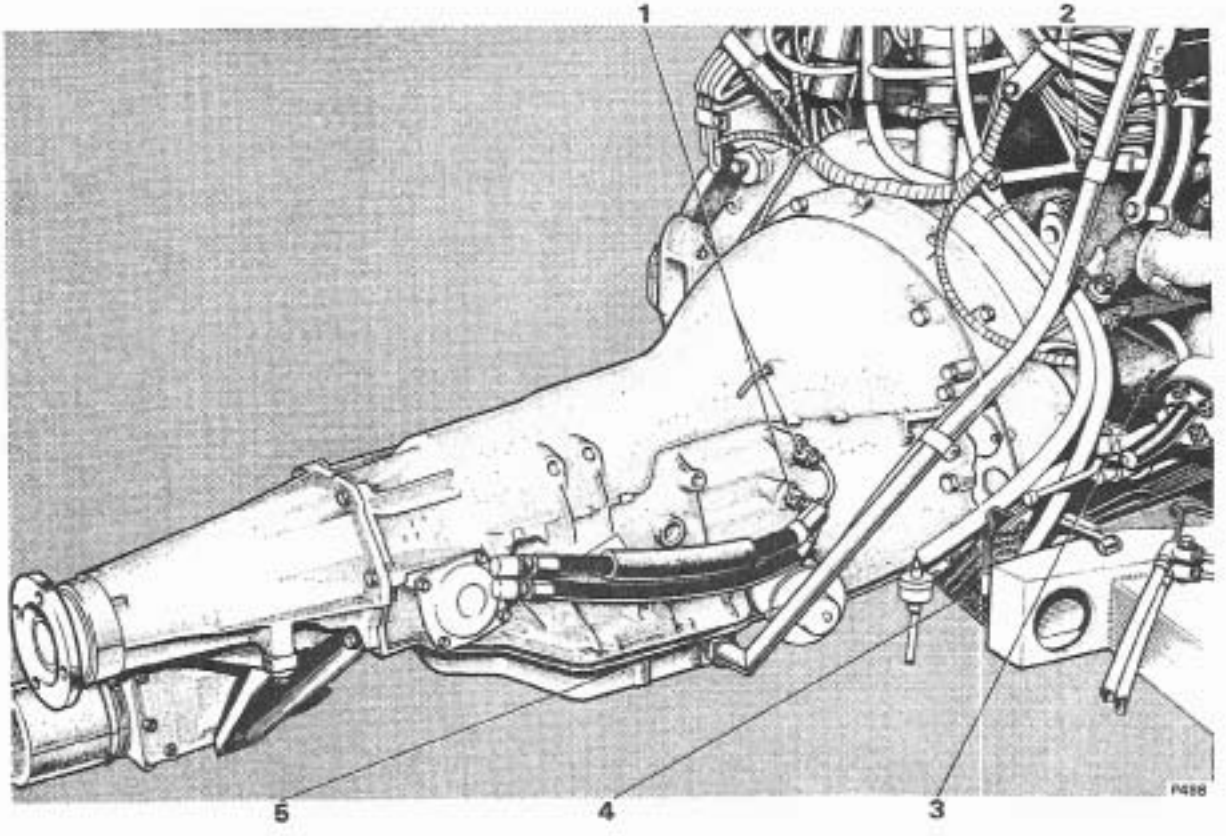

FIG. T166 TRANSMISSION DISCONNECTING POINTS—OFF-SIDE (LATER CARS)

1 Transmission oil cooler pipe connections
2 Dipstick/filler tube clip
3 Starter motor setscrews
4 Offside flexible mount
5 Vacuum modulator pipe

33. Remove any dirt around the mounting brackets, then scribe correlation marks on the transmission feet and the sub-frame around the mounting brackets.

Note Scribing the correlation marks on the mounting brackets will enable the transmission to be correctly positioned when it is fitted.

34. Support the transmission with the aid of a trolley jack and extension, using a suitable platform to fit around the transmission sump.

35. Remove the bolts which secure the rubber mountings to the transmission.

36. Remove the setscrews which secure the brackets to the sub-frame. Remove the mounting brackets and rubber mounts.

37. Unscrew the eight setscrews which secure the transmission to the engine. It may be necessary to lower the engine and transmission slightly to gain access to some of the setscrews; the uppermost setscrews can be reached from the engine compartment.

Note It may not be possible to remove all setscrews completely owing to the close proximity of the adjacent components, however, the setscrews may be unscrewed sufficiently to clear their mating threads. **Do not** remove the five large nuts and one setscrew which secure the transmission to the adapter.

38. Carefully move the transmission towards the rear of the car, disengaging the adapter from the engine crankcase. The adapter is dowelled to the crankcase.

39. On **later cars,** the transmission is secured to the adapter plate by setscrews, and can be removed from

Printed in Great Britain
September 1971
T.S.D. 2476

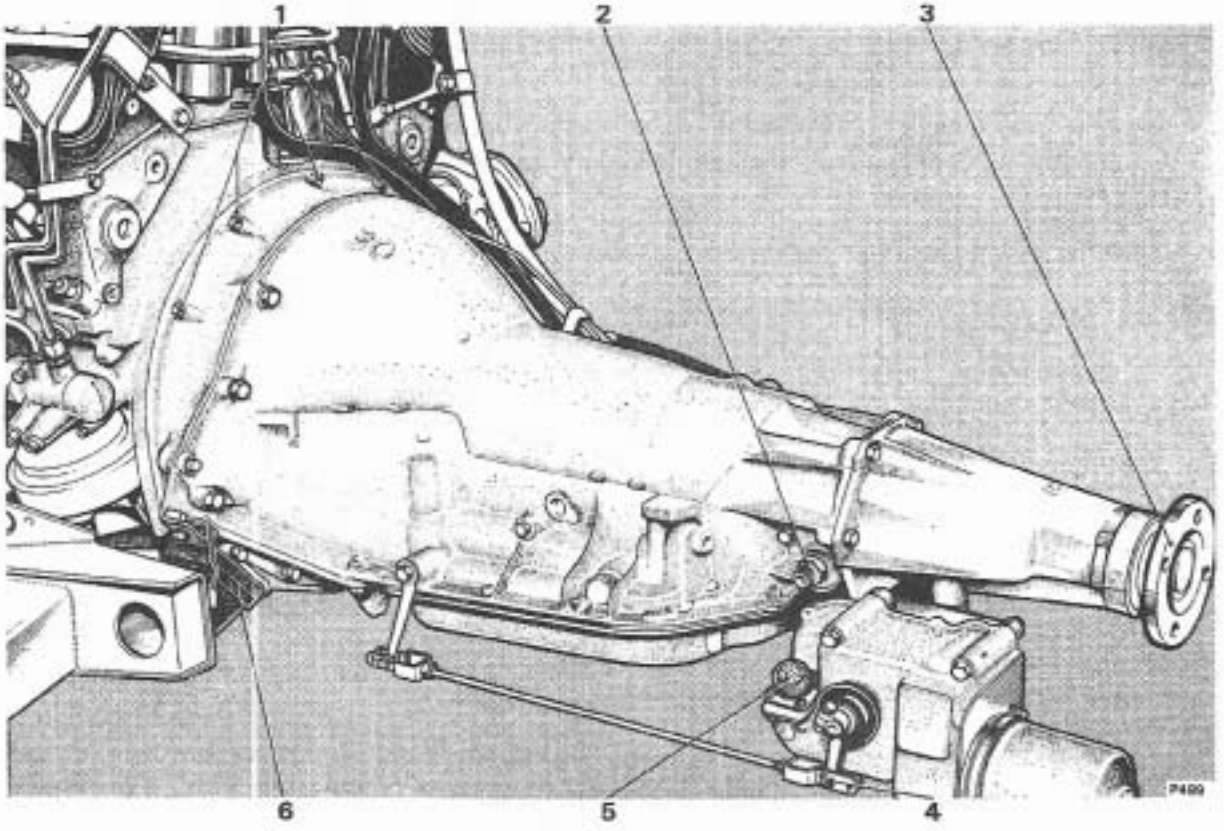

FIG. T167 TRANSMISSION DISCONNECTING POINTS—NEAR-SIDE (LATER CARS)

1 Transmission top securing setscrews
2 Speedometer drive
3 Coupling flange
4 Actuator lever clevis pin
5 Actuator socket
6 Near-side flexible mount

the car whilst leaving the adapter and the mounting plate in position.

40. Support the transmission with the aid of a trolley jack and extension, using a suitable platform to fit around the transmission sump.

41. Unscrew the five setscrews which secure the transmission to the adapter.

42. Carefully move the transmission towards the rear of the car until the dowels in the transmission are clear of the mounting plate.

43. **The remaining procedure is applicable to all cars.**

44. Fit the retaining clamp RH 7952 (J-21366) to prevent the converter from becoming disengaged from the transmission.

Note The retaining clamp must be used, otherwise the converter may fall as the transmission is being removed.

45. Lower the jack until the transmission is clear of the body then remove the transmission from the car.

46. Remove the retaining clamp then withdraw the converter.

Note A converter with oil weighs approximately 50 lb. (22,7 kg.).

47. If overhaul work is to be carried out, fit the transmission into the holding fixture RH 7956 (J-8763-20) as shown in Figure T168.

Transmission—To fit

Fit the transmission by reversing the procedure given for the removal, noting the following points.

1. Torque tighten the various nuts, bolts, setscrews etc. to the figures quoted in Chapter P.

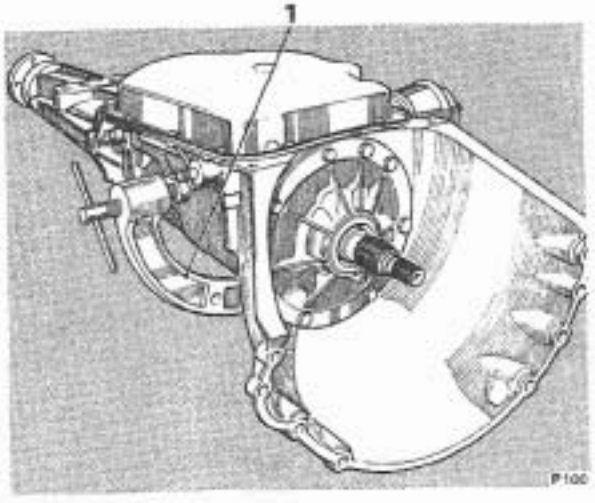

FIG. T168 TRANSMISSION IN HOLDING FIXTURE

1 Holding fixture

2. On **early cars,** ensure that the mating faces of the transmission adapter and the engine crankcase are clean and free from damage.

Note It is advisable to fit the setscrews into those holes which are difficult to reach once the transmission is in position.

3. On **later cars,** ensure that the mating faces of the transmission and the mounting plate are clean and free from damage.

Observe the following notes carefully when securing the torque converter to the engine flexplate.

1. Rotate the converter until two of the three weld nuts on the converter line up with the two bolt holes in the flexplate.

2. Position the converter so that the weld nuts are flush with the flexplate. Ensure that the converter is not tilted and that the pilot in the centre of the converter is correctly located in the crankshaft.

3. Fit two setscrews from the front of the flexplate and torque tighten them to 28 lb. ft. (3,9 kg. m.).

Note The two bolts must be tightened at this stage to ensure that the converter is correctly aligned with the flexplate and crankshaft.

4. Insert a screwdriver or pinch bar under one of the converter weld nuts.

5. Rotate the converter until the third setscrew can be fitted. Torque tighten this setscrew. **Do not** lever on the starter ring when rotating the converter.

6. If the adapter and mounting plate have been removed raise the transmission slightly higher than its normal position and fit the mounting brackets and rubber mounts. Before tightening the brackets to the sub-frame and transmission, ensure that the correlation marks which were scribed during removal, are aligned.

7. Ensure the earthing lead is fitted to the top bolt on the right-hand mounting foot.

8. Connect the throttle operating rod; ensure that the joints are adequately lubricated and that the throttles open fully when the accelerator pedal is depressed and return to the closed position immediately the pedal is released.

9. After completion of the fitting operation, fill the engine cooling system and the transmission system with their respective fluids.

10. Finally road test the car for satisfactory operation.

Printed in Great Britain
September 1971
T.S.D. 2476

Section T10
TORQUE CONVERTER

The torque converter serves two primary functions. It acts as a fluid coupling to transmit engine torque smoothly to the transmission, it also multiplies the engine torque when additional performance is required.

The torque converter comprises three basic elements; a pump, a turbine and a stator (*see Fig. T169*).

The converter cover is welded to the pump to seal all three members in an oil filled housing. An engine driven flexplate bolts directly onto the converter cover so that the converter pump is mechanically connected to the engine and turns whenever the engine rotates.

When the engine is running and the converter pump is rotating, oil is picked up at the centre of the pump and discharged at the rim, between the pump blades.

The pump shell and blades are designed so that the oil leaves the pump rotating clockwise, toward the turbine blades. As the oil strikes the turbine blades, it causes the turbine to rotate.

When the engine is idling, the converter pump rotates slowly and the force of oil is not sufficient to rotate the turbine with any efficiency. This situation enables the car to stand in gear with the engine slowly idling. As the engine throttle is opened, the pump speed increases and the force of oil striking the turbine causes it to transmit torque to the gear train. After the oil has imparted its force to the turbine, the oil follows the contour of the turbine shell and blades, leaving the centre of the turbine, and rotating anti-clockwise.

Because the turbine member has absorbed the force required to reverse the direction of the clockwise

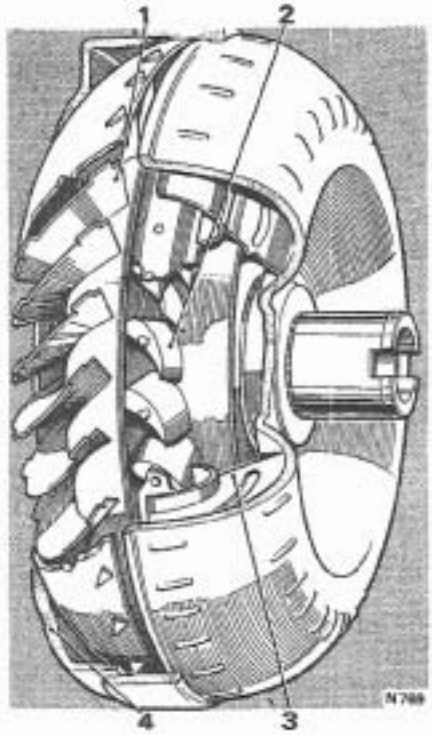

FIG. T169 TORQUE CONVERTER—CUT-AWAY VIEW

1 Turbine
2 Variable angle stator (early cars)
3 Pump
4 Converter cover

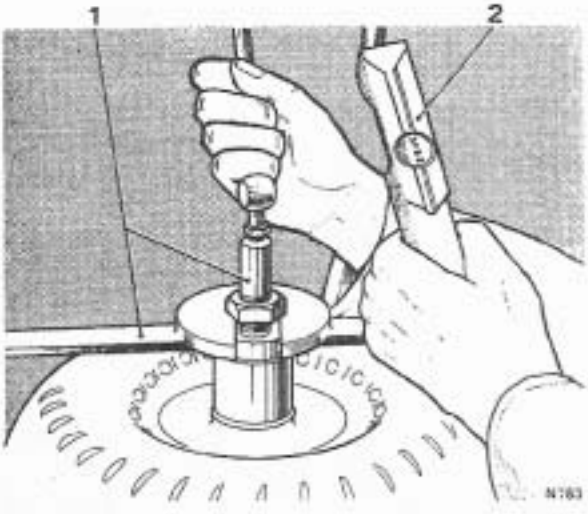

FIG. T170 TORQUE CONVERTER—LEAK TESTING FIXTURE

1 Converter leak test fixture
2 Pressure gauge

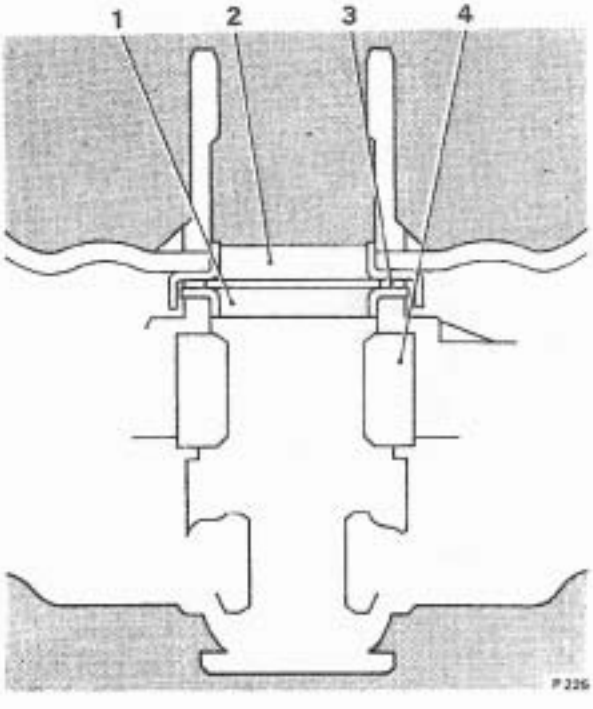

FIG. T171 TORQUE CONVERTER—INTERNAL BEARING ARRANGEMENTS

1 Thrust race L
2 Thrust race Z
3 Thrust roller bearing
4 Roller clutch stator race

rotating oil it now has greater torque than is being delivered by the engine.

To prevent the anti-clockwise spinning oil from striking the pump blades at an angle that would hinder its rotation, a stator assembly is interposed between the pump and the turbine. The purpose of the stator is to redirect the oil returning from the turbine so that its direction is altered to suit that of the pump (*see Fig. T169*); the energy of the oil is then used to assist the engine in turning the pump. This increases the force of the oil driving the turbine and, as a result, multiplies the torque.

The force of oil flowing from the turbine to the stator blades tends to rotate the stator anti-clockwise, but a clutch, on which the stator is mounted, prevents this.

As both turbine and car speeds increase, the direction of the oil leaving the turbine changes. The oil flows clockwise against the rear side of the stator vanes. If the stator was fixed, the flow of oil would be impeded, but the clutch allows the stator to rotate on its shaft. Once the stator becomes inactive there is no further torque multiplication and the converter functions as a fluid coupling at a ratio of 1 : 1.

Torque converter—To remove

1. Remove the transmission as described in Section T9 — Transmission — To remove and fit.

Note Do **not** forget to fit the Convert Holding Clamp RH 7952 (J-21366) otherwise the converter may fall when the transmission is removed.

2. Position a drip tray underneath the converter.
3. Remove the converter retaining clamp from the bell housing end of the transmission casing; remove the converter.

Caution The converter and oil weigh approximately 50 lb. (22,7 kg.) and care should be taken when removing it to ensure that it is not dropped or damaged.

Torque converter—To fit

1. If the torque converter has been leak tested, ensure that all traces of water have been removed.
2. Fit the converter to the transmission, ensuring that the driving slots engage with the tangs in the transmission oil pump.
3. Fit the converter holding clamp RH 7952 (J-21366).

Torque converter—To inspect

After removing the torque converter from the transmission visually inspect as follows.

1. Examine the converter for signs of damage.
2. Examine the neck of the converter for wear.
3. Examine the pump drive slots for wear.

Printed in Great Britain

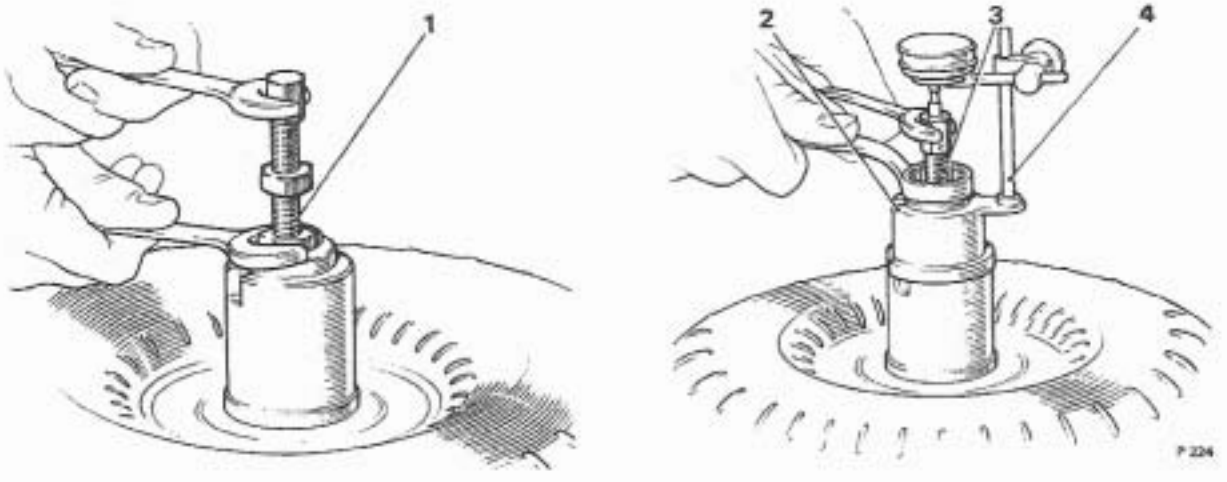

FIG. T172 CHECKING CONVERTER END CLEARANCE

1 Tool J-21371-8
2 Tool J-21371-3
3 Tool J-21371-8
4 Tool J.8001

For a more detailed procedure of inspection refer to 'Torque Converter' in the 'Fault Diagnosis Chart' on Page T175.

September 1971

Torque converter—To leak Test

Fit Workshop Tool RH 7954 (J-21369) to the torque converter as follows.

1. Fit the valve portion of the fixture into the neck of the converter; unscrew the large hexagonal nut.
2. Fit the fixture band crosswise onto the converter so that the slotted plate fits around the valve and under the nut (*see Fig. T170*).
3. Tighten the nut to expand the 'O' ring so that a good seal is obtained.
4. Apply compressed air to the valve in the top of the tool at 80 lb/sq.in. (5,6 kg/sq.cm.).
5. Immerse the converter in water, noting any sign of bubbles which would indicate a leak.
6. Remove the converter from the water.
7. Renew the converter if a leak is evident.
8. Depress the valve stem to release the air pressure; remove the leak test fixture.

Caution Ensure that the pressure is released before removing the fixture, otherwise the valve may blow out during removal.

T.S.D. 2476

Converter end clearance—To check

1. Fully release collet end of Tool J-21371-8.
2. Install collet end of Tool J-21371-8 into converter hub until it bottoms (*see Fig. T172*); then tighten its cap nut to 5 lb. ft. (0,691 kg.m.).
3. Install tool J-21371-3 and tighten hexagon nut to 3 lb. ft. (0,415 kg.m.) (*see Fig. T172*).
4. Install Dial Indicator J-8001 and set it at 'Zero', while its plunger rests on the cap nut of Tool J-21371-8.
5. Loosen the hexagon nut while holding the cap nut stationary. With the hexagon nut loosened and holding tool J-21371-3 firmly against converter hub, the reading obtained on the Dial Indicator will be the converter end clearance. End clearance should be less than 0·050 in. (1,27 mm.). If the end clearance is 0·050 in. (1,27 mm.) or more replace the converter.

Printed in Great Britain
September 1971
T.S.D. 2476

Section T11
VACUUM MODULATOR AND VALVE

The vacuum modulator is secured to the right-hand side of the transmission case and is connected by a pipe to the engine induction system. The modulator consists of a metal case which encloses an evacuated metal bellows, a diaphragm and two springs. These components are arranged so that when fitted, the bellows and an external spring apply a force that acts on the modulator valve to increase modulator pressure. Engine vacuum and an internal spring act in the opposite direction to decrease modulator pressure.

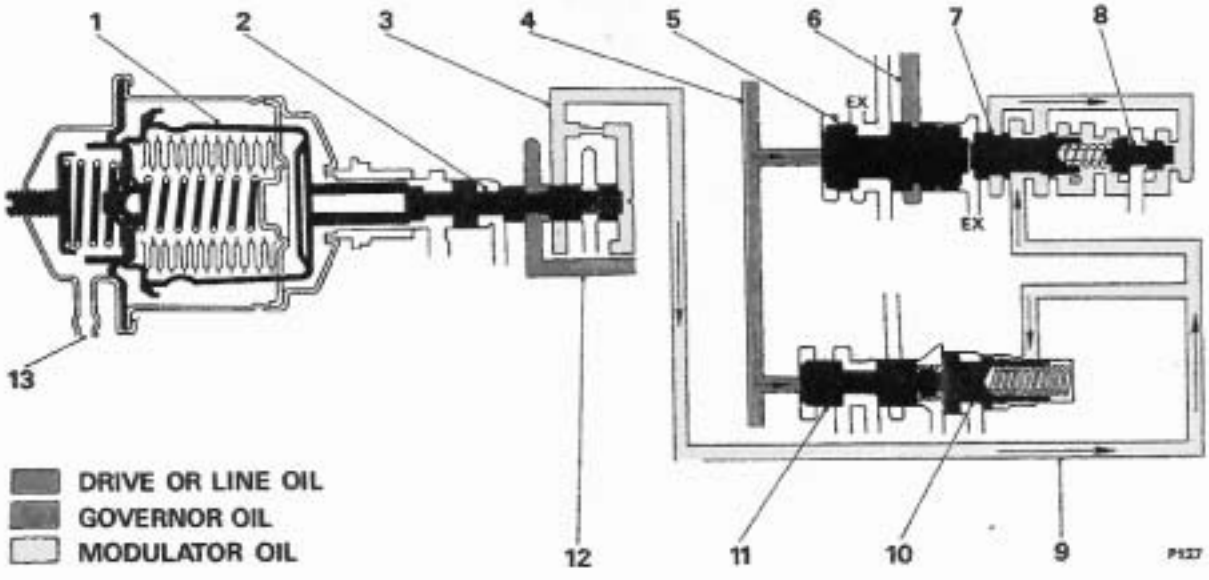

FIG. T173 VACUUM MODULATOR AND VALVE SHOWING MODULATOR PRESSURE

1 Vacuum modulator
2 Modulator valve
3 Modulator oil
4 Governor oil
5 1–2 valve
6 Drive oil
7 1–2 detent valve
8 Regulator valve
9 Modulator oil
10 2–3 modulator valve
11 2–3 valve
12 Line oil
13 Vacuum connection

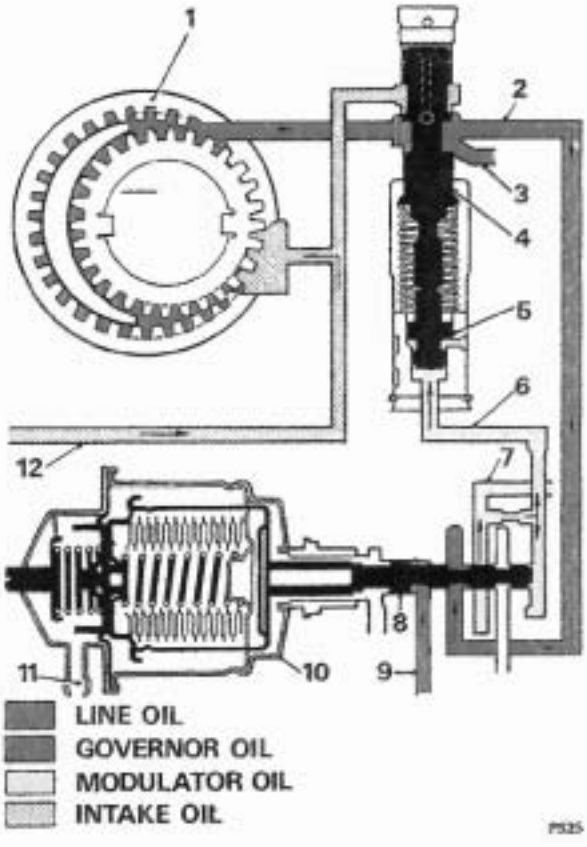

FIG. T174 VACUUM MODULATOR AND VALVE SHOWING LINE PRESSURE CONTROL

1 Vacuum modulator
2 Modulator valve
3 Modulator oil
4 Governor oil
5 1–2 valve
6 Drive oil
7 1–2 detent valve
8 Regulator valve
9 Modulator oil
10 2–3 modulator valve
11 2–3 valve
12 Line oil
13 Vacuum connection

To reduce the effect of altitude on shift points, the effective area of the diaphragm is different than that of the bellows. Atmospheric pressure acts on the resulting differential area to reduce modulator pressure.

The vacuum modulator fitted to a transmission can vary dependent upon 'model year' and original build specification of the car. It is therefore, of utmost importance to ensure that the correct parts are fitted to a transmission should replacement parts be required.

To identify the modulator change the prefix letters of the transmission were change from RR to RS. It should also be noted that on later cars a restrictor is fitted at the bottom of the modulator pipe and an error in assembly at this point could result in a blocked signal line especially on cars fitted with full emission control systems.

Modulator pressure is directed to the 1–2 regulator valve which regulates modulator pressure to a lesser pressure which is proportional to modulator pressure. This tends to keep the 1–2 shift valve in the closed or down-change position. Modulator pressure is directed also to the 2–3 modulator valve to apply a variable pressure proportional to modulator pressure. This tends to hold the 2–3 shift valve in the closed, or down-change position. As a result, the gear change points can be delayed to take place at higher road speeds with heavy throttle application (*see Fig. T173*).

Main line oil pressure is controlled in Drive range so that it will vary with torque input to the transmission. Since torque input is a product of engine torque and converter ratio, modulator pressure is directed to a pressure regulator boost valve, to adjust main line (pump) pressure for changes in either engine torque or converter ratio (*see Fig. T174*).

To regulate modulator pressure and in turn, line pressure, with the converter torque ratio that decreases as car speed increases, governor pressure is directed to the modulator valve to reduce modulator pressure with increases in car speed. In this way, line pressure is regulated to vary with torque input to the transmission for smooth changes with sufficient capacity for both heavy and light acceleration.

Vacuum modulator and valve—To remove

The vacuum modulator can be removed from the transmission without removing the transmission from the car. The following instructions apply whether or not the transmission has been removed.

1. Place a drip tray beneath the vacuum modulator.
2. Disconnect the vacuum pipe at the modulator end if the transmission is in the car (*see Fig. T175*).
3. Remove the setscrew and retainer which secure the modulator to the transmission.
4. Remove the modulator and 'O' ring; discard the 'O' ring.
5. Remove the modulator valve from the transmission case.

Vacuum modulator and valve—To inspect

1. Examine the vacuum modulator for signs of distortion.
2. Examine the 'O' ring seat for damage.
3. Apply suction to the vacuum tube on the modulator and check for leakage.

4. Examine the modulator valve for scores or damage.
5. Ensure that the valve will move freely in its bore in the case.
6. Examine the modulator for damaged bellows. The modulator plunger is under approximately 16 lb. (7,3 kg.) pressure. If the bellows is damaged, very little pressure will be applied to the plunger.

Vacuum modulator and valve—To fit

1. Fit the valve into the bore in the case with the stem outward.
2. Fit a new 'O' ring to the modulator.
3. Fit the modulator to the case with the vacuum pipe connection toward the front of the car, approximately 20° from the vertical.
4. Fit the retainer with the curved side of the tangs facing the transmission.
5. Fit the retaining setscrew and torque tighten it to 18 lb. ft. (2,5 kg. m.).
6. Connect the vacuum pipe.

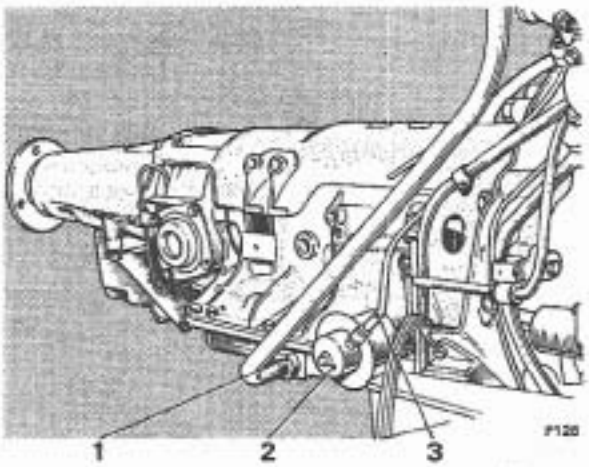

FIG. T175 VACUUM MODULATOR AND VACUUM PIPE

1 Oil filler tube securing nut
2 Vacuum modulator
3 Vacuum pipe

Printed in Great Britain
September 1971
I.S.D. 2476

Printed in Great Britain
September 1971
T.S.D. 2476

Section T12
GOVERNOR ASSEMBLY

The governor assembly (*see Fig. T176*) fits into the rear of the transmission casing on the right-hand side and is driven by a gear on the transmission output shaft.

The car speed signal to the transmission is supplied by this governor.

The assembly comprises a regulating valve, two primary weights, two secondary weights, secondary springs, body and driven gear. The weights are arranged so that only the secondary weights act on the valve. The primary weights contribute to the secondary weights through the secondary springs.

Slight changes in output shaft r.p.m. at low speeds result in small governor pressure changes.

The primary weights add heavy force to the secondary weights to obtain greater changes in pressure as road speed and output shaft r.p.m. increase. As the primary weights move out at higher car speeds they reach a stop and no longer become effective. From this point, the secondary weights and springs only are used to apply pressure on the governor valve.

Drive oil pressure is fed to the governor where it is regulated by the governor and gives an oil pressure that is proportional to car road speed.

To initiate the gear change from first to second, governor oil pressure is directed to the end of the 1-2 shift valve where it acts against spring pressure which is holding the valve in the down-change (closed) position (*see Fig. T177*).

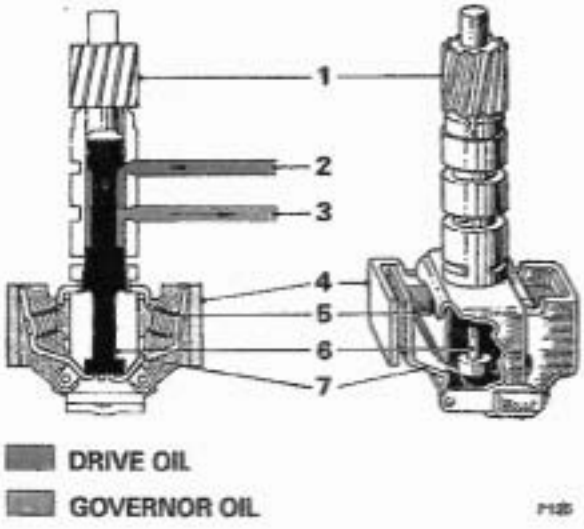

FIG. T176 GOVERNOR ASSEMBLY

1 Driven gear
2 Drive oil
3 Governor oil
4 Primary weight
5 Spring
6 Valve
7 Secondary weight

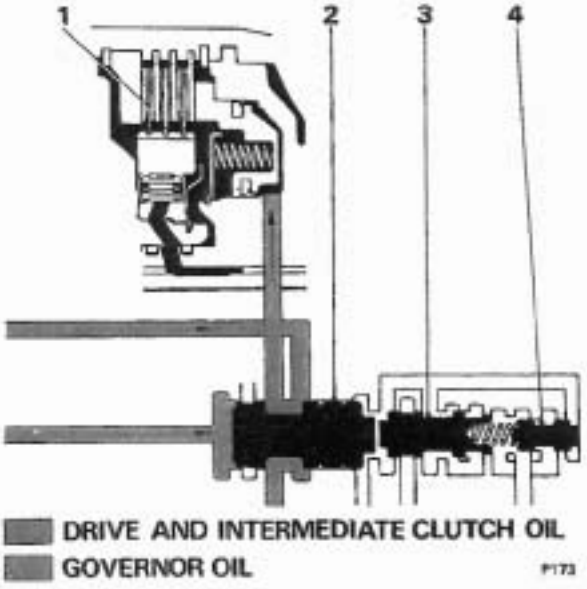

FIG. T177 GOVERNOR OIL ACTING ON THE 1-2 SHIFT VALVE

1 Intermediate clutch
2 1–2 valve
3 1–2 detent valve
4 Regulator valve

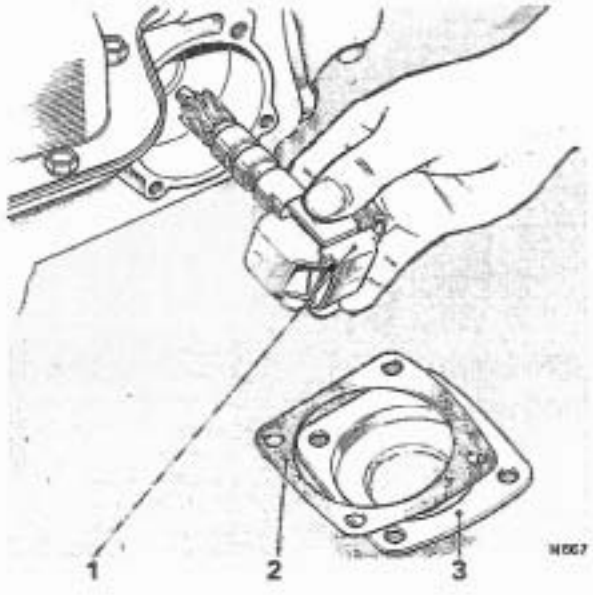

FIG. T178 REMOVING THE GOVERNOR ASSEMBLY

1 Governor
2 Gasket
3 Cover plate

As the car road speed and subsequently the governor oil pressure increases sufficiently to overcome the spring resistance, the 1–2 shift valve train moves, allowing drive oil to flow into the intermediate clutch passage and through an orifice to apply the intermediate clutch. This makes the intermediate clutch effective which moves the transmission into second gear. Further increases in road speed and governor pressure will cause the transmission to change into third gear when governor pressure overcomes the 2–3 shift valve spring pressure.

Governor pressure is directed also to the modulator valve to regulate modulator pressure as described in Section T11.

On cars fitted with **transmissions prior to Serial Number 72 RR 2268** lubrication for the governor was provided by means of an output shaft with an axial lubrication passage which takes lubricant to a point rearwards of the speedometer drive gear. From this point the lubricant passes through a radial drilling to the governor sleeve, providing lubrication for governor.

Cars fitted with **transmission Serial Number 72 RR 2268 and onwards,** governor lubrication is provided by a flat in the governor sleeve which allows oil to pass to the moving parts of the governor. The output shaft of these later transmissions is not provided with any lubrication passages.

In view of these changes it is most important that the new output shaft without the oil passage and the governor with the lubrication flat are used on the later transmission only.

Governor assembly—To remove

The governor assembly can be removed from the transmission whether the transmission is fitted to the car or not.

1. Position a drip tray beneath the governor cover plate.

2. Remove the four setscrews which secure the plate to the case; remove the plate and discard the gasket.

3. Withdraw the governor assembly from the case (*see Fig. T178*).

On later transmissions, changes to manufacture of the transmission case has eliminated the shoulder at the bottom of the governor pipe holes. As a result it is possible to force the governor pipes deep enough into the transmission case to enter the governor bore and either bind or lock the governor.

Therefore, if difficulties are experienced when removing the governor assembly, withdraw the pipes approximately 0·125 in. (0,32 cm.).

Printed in Great Britain
September 1971
T.S.D. 2476

Governor assembly—To dismantle

All the governor assembly components, with the exception of the driven gear, are selectively assembled and each assembly is calibrated. Therefore, it is recommended that if the governor assembly becomes unserviceable, it be renewed as an assembly. If the driven gear is damaged, it can be renewed separately.

It is necessary to dismantle the governor assembly in order to renew the driven gear. Dismantling may be necessary also to thoroughly clean the governor should dirt cause it to malfunction. In such cases proceed as follows.

1. Cut off one end of each of the governor weight retaining pins.

2. Remove the pins, thrust cap, governor weights and springs (*see Fig. T179*). The weights are interchangeable and need not be marked for identification.

3. Carefully remove the governor valve from the sleeve.

Governor assembly—To inspect

1. Wash all the components in clean paraffin (kerosene) then dry them with compressed air.

2. Examine the governor sleeve for scores or burrs.

3. Ensure that the governor sleeve will slide freely into its bore in the transmission casing.

4. Examine the valve for scores and burrs.

5. Ensure that the valve will slide freely in the governor sleeve bore.

6. Examine the driven gear for damage. Ensure that the gear is secure on the shaft.

7. Examine the springs for damage or distortion.

8. Ensure that the weights operate freely in their retainers.

9. Check the valve opening at inlet and exhaust; the minimum is 0·020 in. (0,508 mm.).

10. Hold the governor as illustrated in Figures T180 and T181 when carrying out this check.

Governor driven gear—To renew

1. Drive out the gear retaining pin using a hammer and drift (*see Fig. T182*).

2. Support the governor sleeve on two 0·187 in. (4,76 mm.) thick plates inserted in the exhaust slots in the sleeve.

3. Position the plates on the bed of a press with provision for the gear to pass through, then, using a long drift, press the gear out of the sleeve.

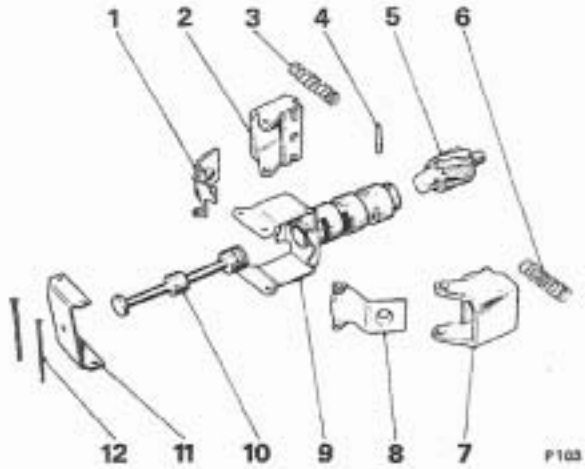

FIG. T179 GOVERNOR ASSEMBLY—EXPLODED

1 Spring retainer (secondary weight)
2 Weight
3 Weight spring
4 Gear retaining pin
5 Driven gear
6 Weight spring
7 Weight
8 Spring retainer (secondary weight)
9 Sleeve and carrier assembly
10 Valve
11 Thrust cap
12 Retaining pins

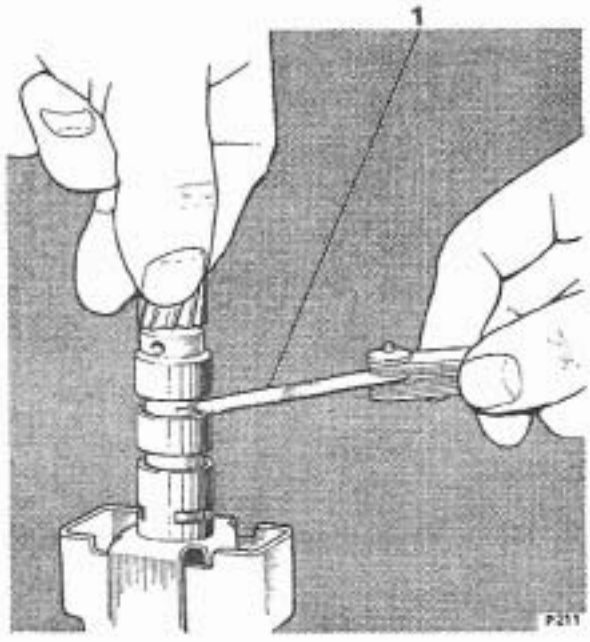

FIG. T180 CHECK VALVE OPENING (INLET)

1 0.020 in. (0,508 mm.) feeler gauge

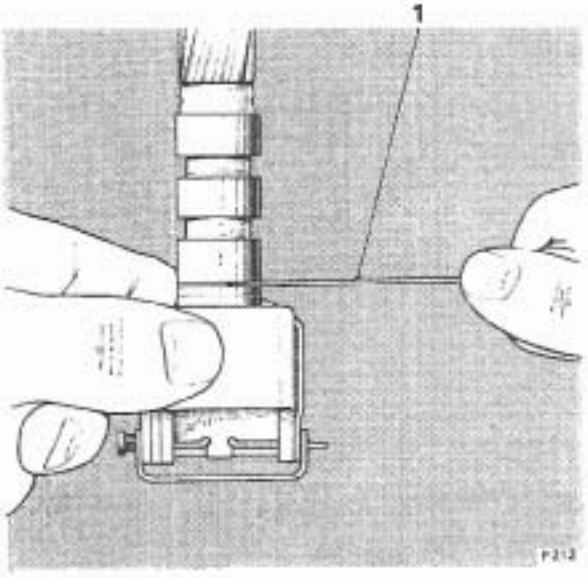

FIG. T181 CHECK VALVE OPENING (EXHAUST)
1 0.020 in. (0,508 mm.) feeler gauge

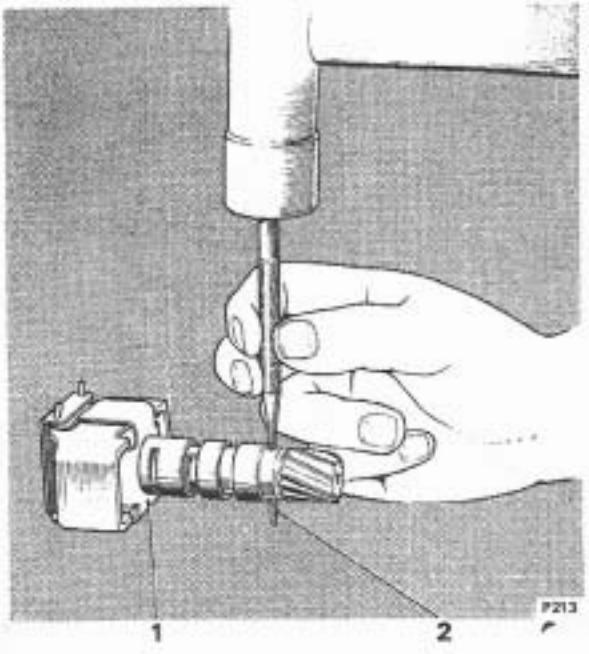

FIG. T182 REMOVING GOVERNOR DRIVEN GEAR RETAINING PIN

1 Governor assembly
2 Gear retaining pin

4. Thoroughly clean the governor sleeve to remove any swarf which may be present from the original gear assembly operation.

Note Ensure that the new gear is the correct one for the transmission casing in which it is to be fitted. A later type of casing incorporates a steady pin which locates the governor driven gear (*see Parts List*).

5. Support the governor sleeve on the two 0·187 in. (4,76 mm.) plates.

6. Position the new gear in the sleeve then, using a suitable drift, press the gear into the sleeve until it is nearly seated.

7. Carefully remove any swarf which may have shaved off the gear hub, then, press the gear down until it abuts the sleeve.

8. Mark the position of a new hole on the sleeve at 90° to the original hole, then using a drill of 0·187 in. (4,76 mm.) diameter, drill a new hole through the sleeve and gear.

9. Fit the gear retaining pin.

10. Thoroughly wash the gear and sleeve assembly in clean paraffin (kerosene) and dry with compressed air.

Governor assembly—To assemble

1. Lightly oil the valve then fit it into the governor sleeve.

2. Fit the governor weights, springs and thrust cap onto the governor sleeve.

3. Align the pin holes in the thrust cap, governor weight assemblies and governor sleeve.

4. Fit new pins and crimp both ends of the pins.

5. Ensure that the governor weights are free to operate on the pins and check the valve for freeness in the sleeve bore.

Governor assembly—To fit

1. Lightly lubricate the governor sleeve and gear then fit the governor assembly into the transmission case.

2. Fit the cover, together with a new gasket.

3. Fit the four setscrews and torque tighten.

4. On later transmissions when installing the governor assembly ensure that a clearance of approximately 0·250 in. (0,64 cm.) is maintained between the governor pipes and transmission case, at a point 1·00 in. (2,54 cm.) from the right angle bend of the pipes.

Printed in Great Britain
September 1971
T.S.D. 2476

Section T13
SPEEDOMETER DRIVE

The speedometer drive (*see Fig. T183*) is secured to the left-hand side of the transmission main casing by a setscrew and retainer. It is driven by a gear on the transmission output shaft at a ratio of 43 : 19.

Speedometer drive—To remove

1. To disconnect the speedometer cable unscrew the knurled nut at the transmission end then withdraw the cable.
2. If the speedometer drive is to be removed for any length of time, mask the open end of the drive cable to prevent the ingress of dust and dirt.
3. Remove the setscrew and retainer then withdraw the speedometer drive; discard the 'O' ring.

Speedometer drive—To dismantle

1. Hold the gear between soft jaws in a vice.
2. Remove the split pin then remove the nut and washer securing the gear to the drive-shaft.
3. Tap the gear off the shaft using a soft-headed mallet.
4. Utilizing the two machined flats on the oil seal housing, hold the housing in soft jaws in a vice then unscrew the halves of the assembly.
5. Withdraw the drive-shaft.

Speedometer drive—To inspect

1. Wash all the dismantled parts in clean paraffin (kerosene).
2. Examine the gear teeth for damage or excessive wear.

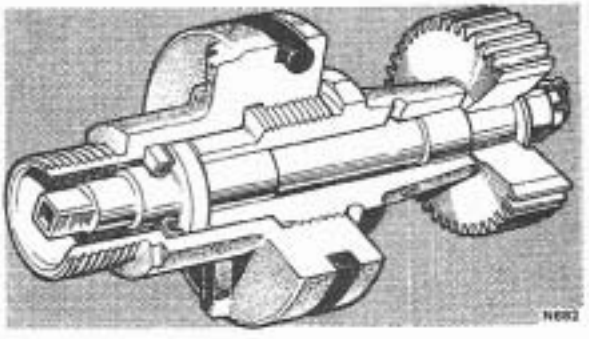

FIG. T183 SPEEDOMETER DRIVE

3. Examine the squared end of the shaft for cracking.
4. Examine the threads on the oil seal retainer for damage.
5. If the oil seal is to be renewed it should be pressed out of the housing using a suitable drift.
6. Examine the drive-shaft for burrs or sharp edges which may damage the oil seal during assembly.

Speedometer drive—To assemble

To assemble the speedometer drive, reverse the procedure given for dismantling, noting the following points.

1. Torque tighten the castellated nut to 8 lb. ft. (1,1 kg. m.) then take the nut to the nearest split pin hole.

2. Do not slacken the nut to correlate the hole and slot.
3. Fit a new split pin.
4. Lightly lubricate the drive-shaft before passing it through the oil seal.
5. Ensure that the body and the seal housing are screwed tightly together.
6. Check the drive-shaft end float; there should be a minimum of 0·015 in. (0,38 mm.).

Speedometer drive—To fit

1. Fit a new 'O' ring to the groove in the speedometer drive housing.
2. Lightly lubricate the 'O' ring to ease the fitting of the speedometer drive; fit the drive to the case.
3. Fit the retainer and setscrew. Torque tighten the setscrew to 18 lb. ft. (2,49 kg. m.).
4. Connect the speedometer drive cable.

DIMENSIONAL DATA FOR SECTION T13
SPEEDOMETER DRIVE

DESCRIPTION	DIMENSION	PERMISSIBLE WORN DIMENSION	REMARKS
Drive-shaft end float.	0·015 in. (0,38 mm.) minimum	——	——
Gears backlash.	0·008 in. to 0·014 in. (0,20 mm. to 0,35 mm.)	——	——
Castellated nut — gear to shaft.	Torque tighten to 8 lb. ft. (1,11 kg.m.)	——	Take nut to next split pin hole.
Setscrew — speedometer housing retainer to casing.	Torque tighten to 18 lb. ft. (2,49 kg.m.)	——	——

Printed in Great Britain
September 1971
T.S.D. 2476

Section T14
SUMP, STRAINER AND INTAKE PIPE

Strainer and intake pipe—To remove

The strainer and intake pipe assembly may be removed from the transmission whether the transmission is fitted to the car or not.

The following procedure should be adopted, assuming that the transmission is fitted to the car.

1. Position a clean container under the dipstick tube nut where it enters the sump. The capacity of the container should be 4 pints (Imp.), 4,8 pints (U.S.), 2,27 litres minimum.
2. Slacken the setscrews in the clips at the top of the dipstick tube.
3. Unscrew the sleeve nut at the bottom of the tube then pull the tube clear of the sump; allow the oil to drain.

Early cars only

4. Remove the heat exchanger fluid pipes (*see Fig. T184*). Blank off the feed and return holes in the case and the heat exchanger.
5. Remove the four setscrews which secure the heat exchanger to the bottom cover of the torque converter.
6. Push the heat exchanger clear of the sump and secure it temporarily to obtain access to the setscrews securing the front of the sump.

All cars

7. Remove the thirteen setscrews securing the sump.
8. Lower the sump and drain the remaining oil; discard the gasket.

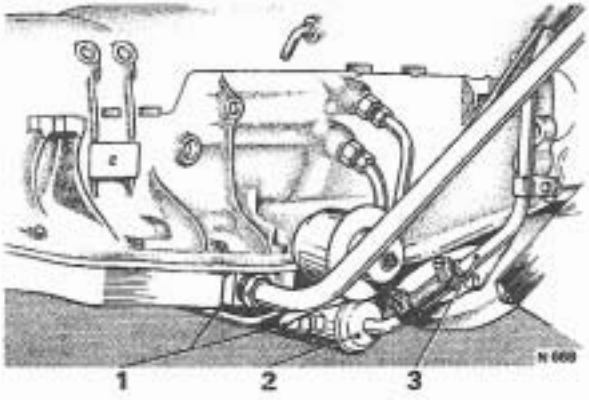

FIG. T184 HEAT EXCHANGER FLUID PIPES (EARLY CARS)

1 Transmission fluid pipes
2 Heat exchanger
3 Coolant pipe

Early cars only

9. Lift out the strainer and intake pipe assembly (*see Fig. T185*).
10. Remove and discard the intake pipe 'O' ring.

Later cars

11. Remove the filter retaining bolt.
12. Lift out the pump intake pipe and filter assembly (*see Fig. T186*). Remove the intake pipe from the filter and discard the filter.

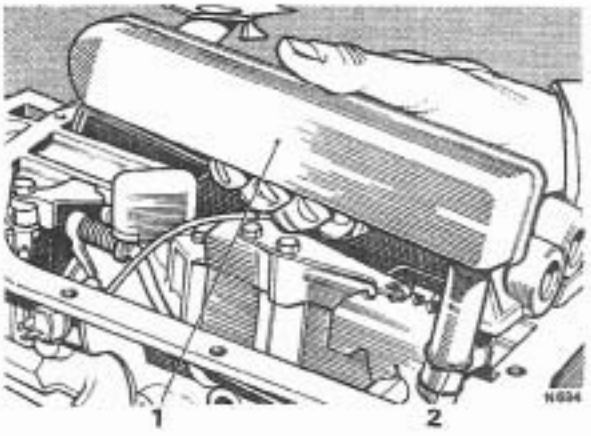

FIG. T185 REMOVING THE STRAINER AND INTAKE PIPE ASSEMBLY (EARLY CARS)

1 Strainer and intake pipe assembly
2 'O' ring

13. Remove and discard the intake pipe 'O' ring.

Note **In cases where the transmission has failed, the strainer and intake pipe must be renewed.**

Strainer and intake pipe—To fit

Early cars

1. Fit a new 'O' ring into the intake pipe bore in the transmission case.
2. Lightly lubricate the 'O' ring then fit the strainer and intake pipe assembly.

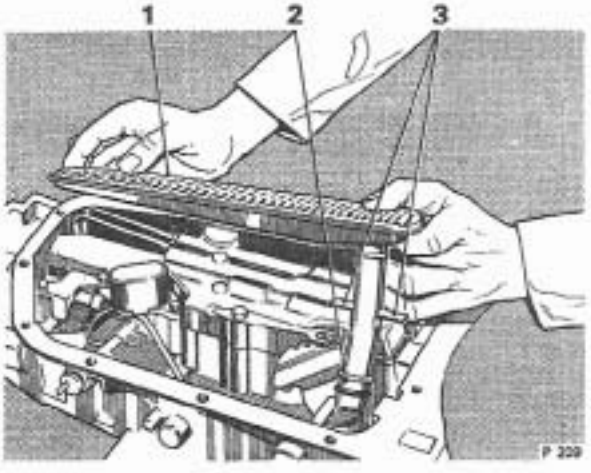

FIG. T186 REMOVING INTAKE PIPE AND FILTER ASSEMBLY

1 Filter assembly
2 Intake pipe with 'O' Ring
3 Locator tabs

Later cars

3. Fit a new intake pipe 'O' ring onto the pipe. Lightly lubricate the 'O' ring. Fit the intake pipe into the strainer. Fit the intake pipe and strainer assembly into the transmission.

All cars

4. Ensure that the sump is clean then fit the sump, using a new gasket.
5. Fit the setscrews to secure the sump; torque tighten them to 12 lb. ft. (1,66 kg. m.) (*see Chapter P*).
6. Fit the heat exchanger and pipes, ensuring that the ends of the pipes and the sleeve nut threads are clean and free from dirt.
7. Fit the dipstick tube; tighten the sleeve nut and the two clip securing setscrews.

Note Reports indicate that the first early type strainer assembly with the integral intake pipe and shroud, has been installed in transmissions with the later type sump.

The late sump does not have the configuration to accommodate the first type strainer assembly. Use of the first type strainer assembly with the second type sump will result in low or erratic oil pressure and pump cavitation noise caused by the restricted intake to the strainer assembly because of the oil sump configuration. A transmission failure will result from this incorrect combination of sump and strainer assembly.

The first type oil sump is not deep enough to accommodate the flat second type strainer assembly and if their installation as a combination is attempted, the strainer assembly will be crushed.

When service replacement of the strainer assembly and/or oil sump is required, they must be used in the following combinations.

COMBINATION 1 — Use the first type strainer, Part Number GM 5579822, with the first type sump, Part Number GM 8623778.

COMBINATION 2 — Use the second type strainer assembly, Part Number GM 6437741, and intake pipe assembly, Part Number GM 8625428, with the second type oil sump, Part Number GM 8625766.

Always consult the **latest** relevant service literature concerning part numbers, etc.

Printed in Great Britain
September 1971
T.S.D. 2476

Section T15
CONTROL VALVE UNIT

The control valve unit comprises a cast iron body containing various shift valves and regulator valves which control the gear changes and the timing and spacing of the changes. The unit is secured to an oil guide plate on the bottom face of the transmission.

Drive range

When the selector lever on the steering column is moved to 'D', the actuator moves the manual valve, by way of levers and rods, to allow main line oil pressure to be delivered to the forward clutch (*see Fig. T187*). With the forward clutch applied, mechanical connection between the turbine shaft and the mainshaft is provided. The Low roller assembly becomes effective as the result of power flow through the compound planetary gear arrangement and the transmission will be in first gear.

As the speed of the car increases, first gear is no longer suitable and an up-change to second is required.

To initiate the change from first to second, governor pressure (*see Section T12 — Governor Assembly*) is directed to the end of the 1–2 shift valve. As the car speed increases, governor pressure moves the valve to allow drive oil to apply the intermediate clutch (*see Fig. T177 in Section T12*). This makes the intermediate roller clutch effective and the transmission changes into second gear.

The change to third gear is controlled by the 2–3 shift valve. The operation of the 2–3 shift valve is similar to that of the 1–2 shift valve. Springs acting on the valve tend to hold the valve closed against governor pressure. When the speed of the car is sufficient, the 2–3 shift valve opens and allows intermediate clutch oil to apply the direct clutch. The transmission then moves into third (top) gear. Oil pressure to the direct clutch piston is applied only to a small inner area of the piston in third gear.

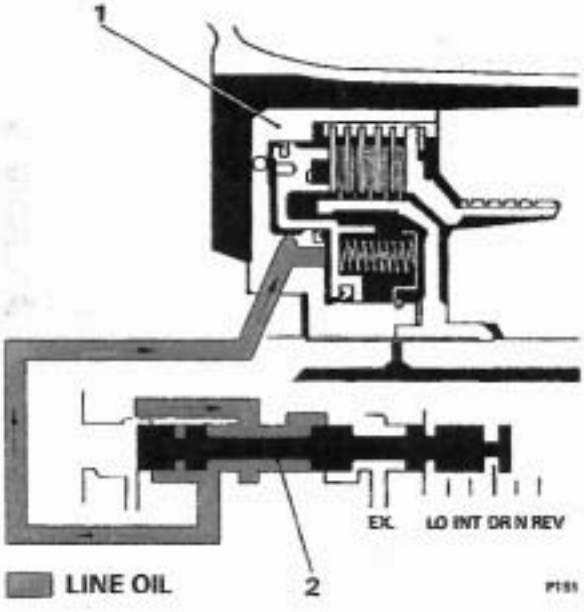

FIG. T187 MANUAL VALVE AND FORWARD CLUTCH

1 Forward clutch
2 Manual valve

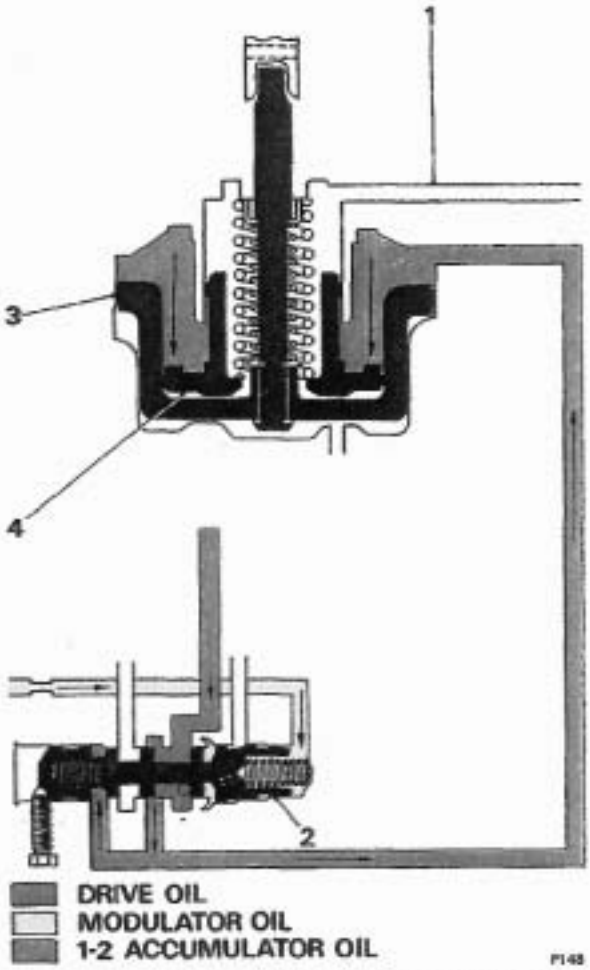

FIG. T188 ACCUMULATOR PISTON STROKE PRIOR TO 1–2 UP-CHANGE

1 Intermediate clutch passage
2 1-2 accumulator valve
3 Accumulator piston
4 Servo piston

Down-change

When the accelerator pedal is released and the car is allowed to decelerate to a stop, the down-changes will occur automatically as the valve springs overcome the diminishing governor pressure.

Delayed up-change

If the hydraulic system was as basic as previously described, the gear change points would always occur at the same road speeds. When accelerating under heavy loads or when maximum performance is required, it is desirable to have the change points occurring at higher road speeds. To achieve this, a modulator valve is used (*see Section T11 — Vacuum Modulator and Valve*).

Clutch application control

To introduce gearchange 'feel', and to ensure long clutch plate life, the clutch apply pressure is regulated to suit throttle application (*see Fig. T188*). The intermediate clutch is controlled according to throttle opening as follows.

Line pressure is varied by the modulator.

A 1–2 accumulator valve train provides a variable accumulator pressure to cushion clutch apply. The 1–2 accumulator valve train is supplied with drive oil and is controlled by modulator pressure. During light throttle application, drive oil is reduced to a low accumulator pressure. During heavy throttle applications, accumulator pressure approaches full main pressure. Accumulator pressure is made to act on one side of the rear accumulator piston in the rear servo (*see Section T15 — Rear Servo*). In first gear, the accumulator piston is stroked to its lower position to prepare it for the change to second gear.

When the 1–2 shift valve opens, intermediate clutch apply oil is also directed to the rear servo accumulator piston, stroking the piston against the 1–2 accumulator oil and the accumulator spring (*see Fig. T189*). This action absorbs a small amount of the intermediate clutch apply oil and permits the clutch apply time and pressure to be controlled for the correct gear change feel.

The direct clutch apply rate is controlled by the front accumulator piston. Located in the control valve assembly, it is part of the front accumulator and servo piston system (*see Fig. T190*). In 'D' range, second gear, the accumulator is stroked against the accumulator spring by servo oil. Because servo oil is main line pressure and varies with throttle opening, the pressure in the accumulator is varied according to throttle opening.

When the 2–3 shift valve opens, direct clutch oil flows to the direct clutch and the front accumulator piston (*see Fig. T191*). Direct clutch pressure rises so that the force from it, plus the accumulator spring force, overcomes the force from the servo pressure and moves the accumulator piston to the stop on the accumulator piston pin. This in turn strokes the servo piston the same amount, allowing it to just contact the band apply washer on the servo pin. However, it will not move the pin or apply the band. The stroking of the accumulator piston absorbs an amount of direct clutch oil and permits the direct clutch to apply at a controlled rate for a smooth 2–3 change.

3-2 valve operation

To take full advantage of the torque converter's ability to multiply torque when required, a 3–2 valve is used. This valve permits the accelerator to be depressed for moderate acceleration at low speeds in third gear without causing the transmission to change down. This allows the torque converter to sense the changes in engine speed and thus provide additional converter ratio for improved performance

Printed in Great Britain
September 1971
I.S.D. 2476

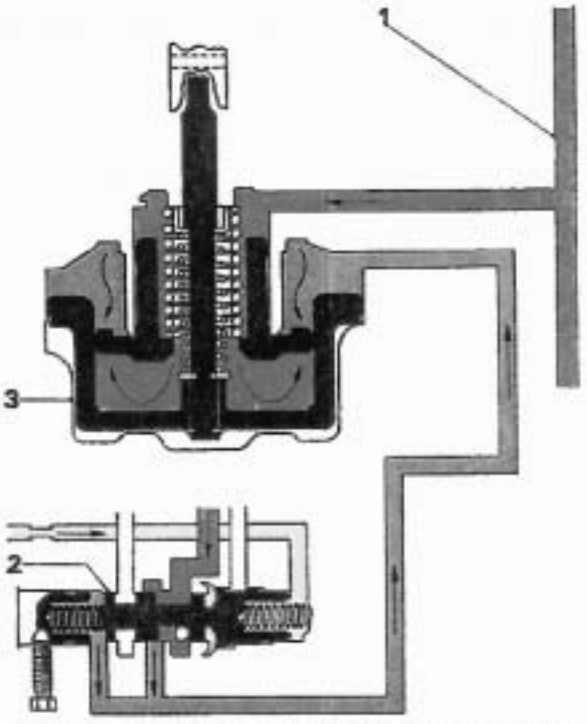

DRIVE AND INTERMEDIATE CLUTCH OIL
MODULATOR OIL
1-2 ACCUMULATOR OIL

FIG. T189 ACCUMULATOR CUSHIONING INTERMEDIATE CLUTCH APPLICATION

1 Intermediate clutch oil
2 1-2 accumulator valve
3 Rear servo

The 3–2 valve system is such that it will permit a 3–2 down-change during moderate to heavy acceleration when modulator pressure reaches approximately 108 lb/sq. in. (7,59 kg/sq. cm.) (*see Fig. T192*). Modulated oil pressure, plus spring pressure, will move the 3–2 valve against the force of direct clutch oil allowing modulator pressure to be directed to the shift valve trains. Modulator oil can then close the 2–3 valve train against governor pressure causing the part throttle 3–2 down-change.

Forced down-change (kick-down)

At road speeds below approximately 70 m.p.h. (113 k.p.h.) a detent (forced) down-change can be obtained by depressing the accelerator pedal. When the accelerator pedal is fully depressed, the detent valve train takes over from the modulator as the change-point controller.

Main line oil is fed through a small orifice to one end of the detent valve. During normal operation, the port at the orifice end of the valve is sealed by the needle valve in the detent solenoid assembly. Line pressure thus holds the detent valve in an inoperative or normal position (*see Fig. T193*).

When the throttle is wide open, an electric micro-switch is closed, energising the detent solenoid. This opens an exhaust port at the solenoid causing a pressure drop on the end of the detent valve. The detent valve is moved by the detent valve regulator valve spring and allows the detent regulator to regulate detent oil to a fixed pressure of approximately 70 lb/sq. in. (4,92 kg/sq. cm.).

When the detent valve moves, detent oil is allowed to flow into both the modulator and the detent oil passages to the shift valve trains. The points at which up-changes will then occur is controlled by detent pressure in the modulator passages. Detent down-changes are controlled by detent pressure in the detent passages. These change points are fixed at relatively high speeds by the constant oil pressure.

Detent pressure directed to the 1–2 regulator valve makes a detent 2–1 change available at car speeds below approximately 20 m.p.h. (32 k.p.h.).

To preserve the clutch linings during 1–2 up-changes under full throttle conditions, detent oil is directed to the 1–2 accumulator valve to increase 1–2 accumulator pressure (*see Fig. T194*).

Detent oil is also directed to the modulator valve to prevent modulator pressure from falling below 70 lb/sq. in. (4,92 kg/sq. cm.). This prevents main line pressure from falling below approximately 105 lb/sq. in. (7,38 kg/sq. cm.) regardless of altitude or car speed.

Intermediate range

When the selector lever is moved to the Intermediate 'I' position, the manual valve is moved to uncover a passage which will allow intermediate range oil to act on the 2–3 shift valve. Intermediate oil pressure on the 2–3 shift valve will cause the valve to move and the transmission will change down, regardless of car speeds (*see Fig. T195*).

To provide overrun engine braking, the front band is applied by the front servo. Intermediate clutch oil flows to the apply side of the servo piston. An orifice is incorporated in the flow path to ensure a smooth piston movement and band application. Intermediate range oil is directed to a check ball which allows the oil to enter the modulator passage leading to the pressure regulator boost valve. The resultant increase of pressure on the end of the boost valve raises main line pressure to 150 lb/sq. in. (10,55 kg/sq. cm.) and provides sufficient holding forces for overrun engine braking.

Low range

When the selector lever is moved to the Low 'L' range position, the manual valve is moved to allow Low range oil to flow to the detent regulator valve and spacer pin. The spring behind the regulator valve then moves the regulator and detent valves to the opposite

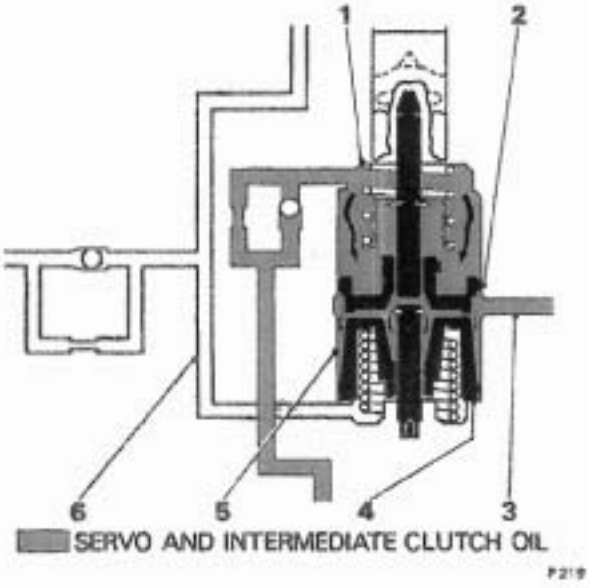

FIG. T190 FRONT ACCUMULATOR PISTON STROKED PRIOR TO 2—3 UP-CHANGE

1 Transmission case
2 Servo piston
3 Intermediate clutch oil
4 Accumulator piston
5 Valve body
6 Direct clutch oil passage

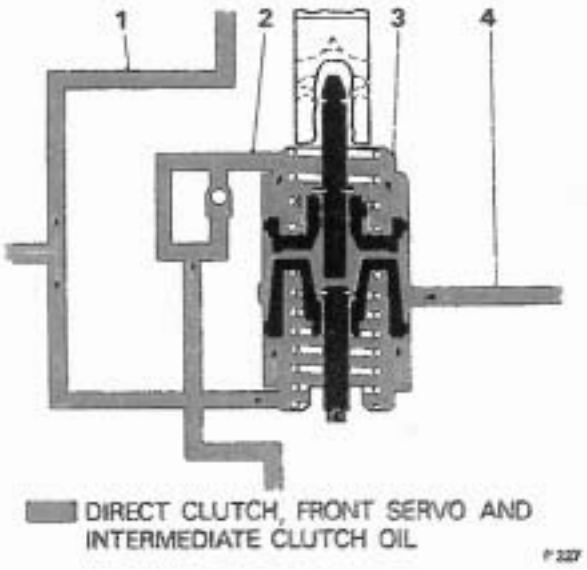

FIG. T191 FRONT ACCUMULATOR PISTON CUSHIONING DIRECT CLUTCH APPLICATION

1 Direct clutch oil
2 Intermediate clutch oil
3 Accumulator housing
4 Servo oil

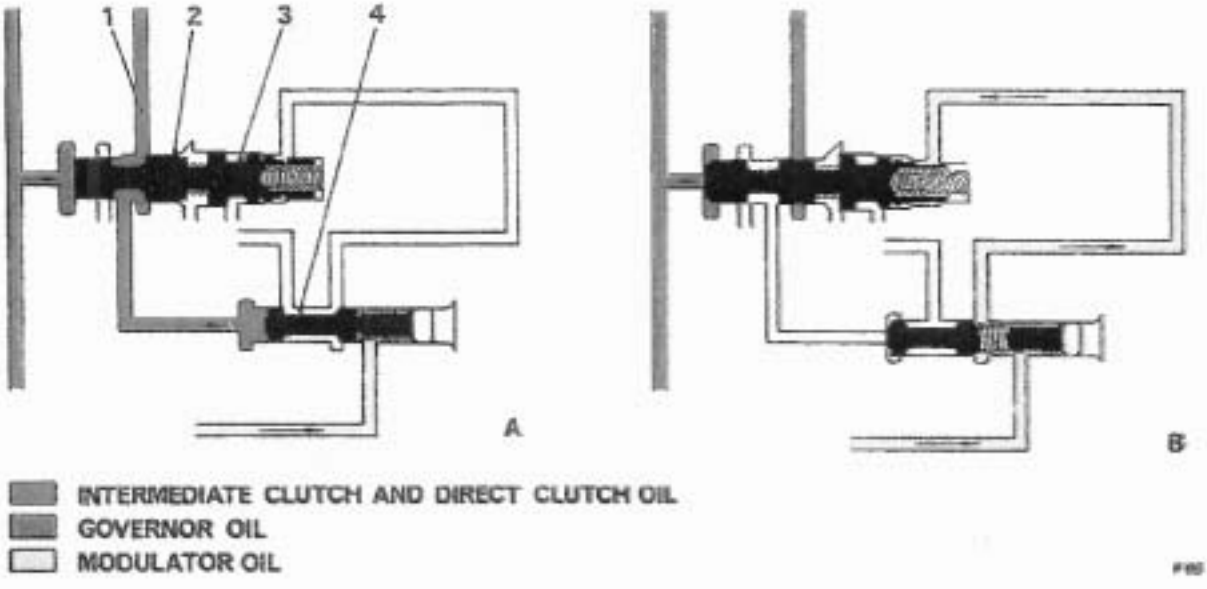

FIG. T192 PART THROTTLE DOWN-CHANGE

1 Intermediate clutch oil

2 2-3 valve

3 2-3 modulator valve

4 3-2 valve

A Valves in 3rd gear position, modulator pressure below approximately 108 lb/sq. in. (7,6 kg/sq. cm.)

B Part throttle down-change valves in 2nd gear position modulator pressure above 108 lb/sq. in. (7,6 kg/sq. cm.)

Printed in Great Britain
September 1971
T.S.D. 2476

end of the valve bore. Low range oil then prevents the regulator valve from regulating and drive oil passes through the hole in the regulator valve into the detent and modulator passages at a Low range pressure of 150 lb/sq. in. (10,55 kg/sq. cm.). As a result of this, the 1–2 shift valve will move to cause a down-change at road speeds below approximately 40 m.p.h. (64 k.p.h.) and will prevent an up-change, regardless of the speed of the car.

When the 1–2 shift valve closes, the exhausting intermediate clutch oil lifts two check balls off their seats to enable the front band and the intermediate clutch to release quickly (*see Fig. T196*).

To provide overrun engine braking, the rear band is applied by directing Low range oil pressure to the rear servo.

Low range oil is directed to the 1–2 accumulator valve during Low range operation to raise 1–2 accumulator pressure to line pressure. This increased pressure, directed to the rear servo accumulator piston, resists servo apply pressure and slows down the application of the rear band to enable a smooth change to be obtained during manual change to Low range, first gear, or for a 2–1 change in Low range.

Reverse

When Reverse 'R' is selected, the manual valve is moved to allow Drive, Intermediate, and Low range oil to be exhausted, and allows main line oil to enter the reverse passages (*see Fig. T197*). Reverse oil pressure is directed from the manual valve to the large outer area of the direct clutch piston and to the 2–3 shift valve where it enters the direct clutch exhaust port. Reverse oil then flows past the 2–3 shift valve, which is in the down-change position, and enters the third gear direct clutch apply passage. This passage directs reverse oil pressure to the small inner area of the direct clutch piston. With oil pressure on both inner and outer positions of the piston, the clutch applies. Reverse oil pressure is directed also to a check ball which allows oil to enter the same passage to the rear servo apply piston that Low range oil occupied in Low range; this applies the rear band. To ensure adequate oil pressure for the torque requirements in Reverse, reverse oil pressure is directed to the pressure boost valve which increases line pressure to a maximum of approximately 260 lb/sq.in. (18,28 kg/sq.cm.).

Control valve unit—To remove

Note Before removing the control valve unit from a transmission installed in a vehicle, take note of the transmission serial number. If the **Transmission Serial Number** is **70-RR-2626 and onwards** take extreme care when removing the control valve unit as the front servo piston and related parts may fall from the transmission due to the normal freeness of the 'Teflon' oil sealing rings.

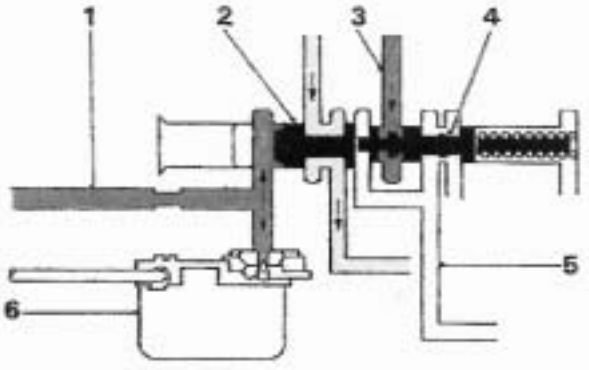

LINE AND DRIVE OIL
MODULATOR OIL

FIG. T193 DETENT VALVE CLOSED

1 Line oil
2 Detent valve
3 Drive oil
4 Detent regulator valve
5 Detent oil passage
6 Line oil

The control valve unit may be removed with the transmission in position in the car. The oil must be drained and the sump removed to gain access to the control valve unit.

1. Unscrew the setscrew which secures the detent spring and roller assembly. Remove the spring and roller assembly.

2. Remove the twelve setscrews which secure the control valve unit to the transmission case; remove the clips but leave them attached to the lead. Do not remove the solenoid securing screws.

Note On later models, the number of setscrew holes in the control valve unit was reduced by two, whilst the holes in the transmission case, spacer plate and gasket remain the same. When renewing a control valve unit, all the setscrew holes in the control valve unit must be used.

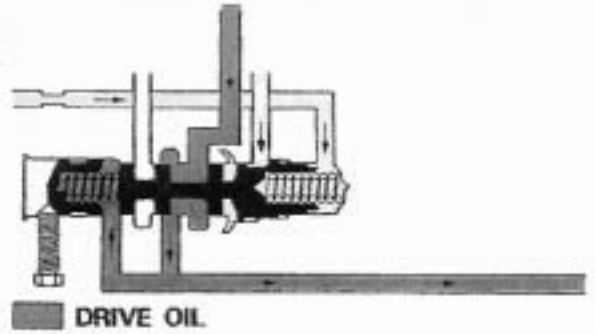

DRIVE OIL
MODULATOR OIL
1-2 ACCUMULATOR OIL
DETENT OIL

FIG. T194 1—2 ACCUMULATOR VALVE

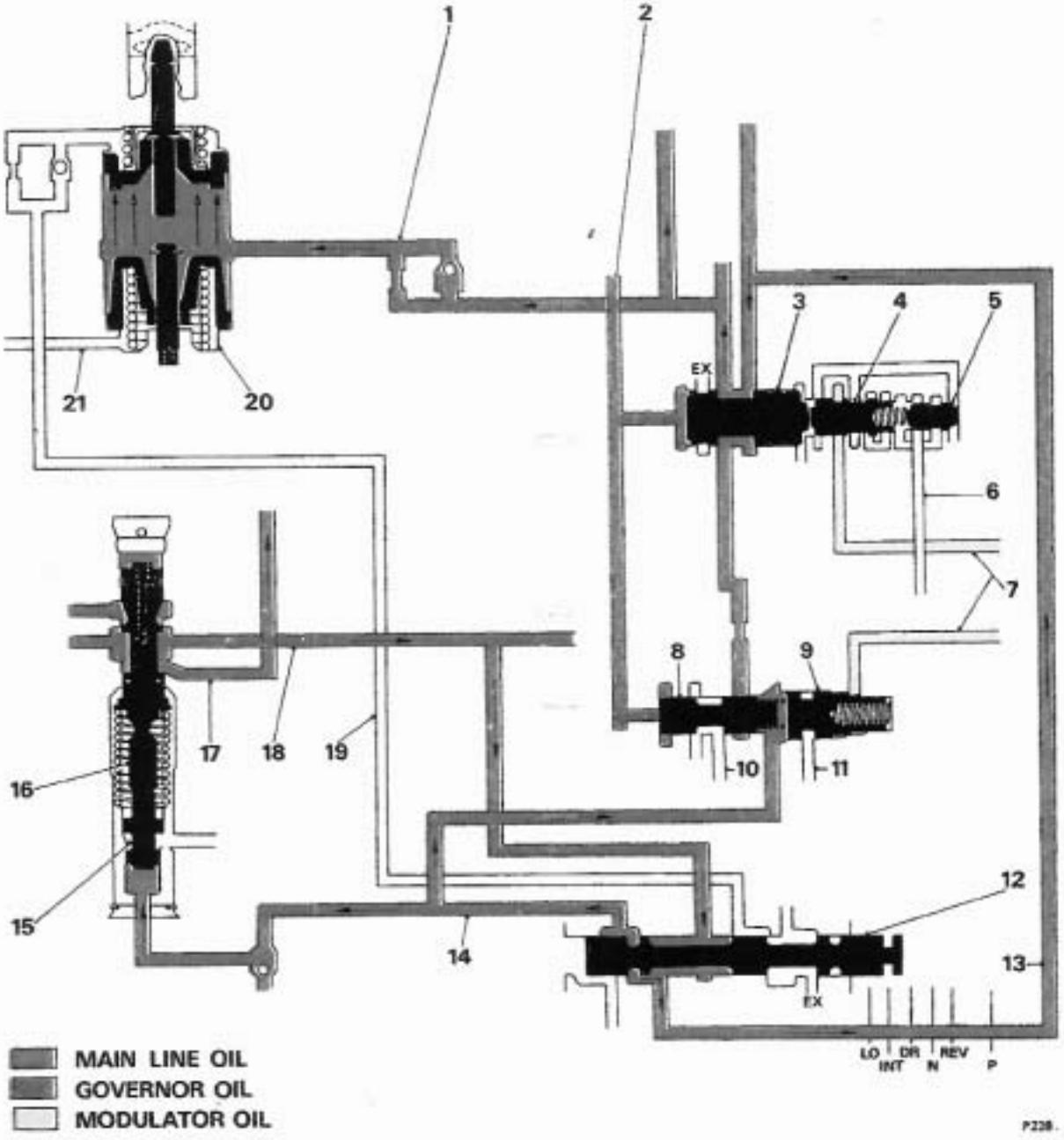

FIG. T195 VALVES—INTERMEDIATE RANGE— 2ND GEAR

1 Intermediate clutch oil
2 Governor oil
3 1–2 valve
4 1–2 detent valve
5 Regulator valve
6 Detent passage
7 Modulator oil
8 2–3 valve
9 2–3 modulator valve
10 Direct clutch passage
11 Detent passage
12 Manual valve
13 Drive oil
14 Intermediate oil
15 Boost valve
16 Pressure regulator valve
17 Converter oil
18 Line oil
19 Servo oil passage
20 Accumulator piston
21 Servo oil passage

Printed in Great Britain
September 1971
T.S.D. 2476

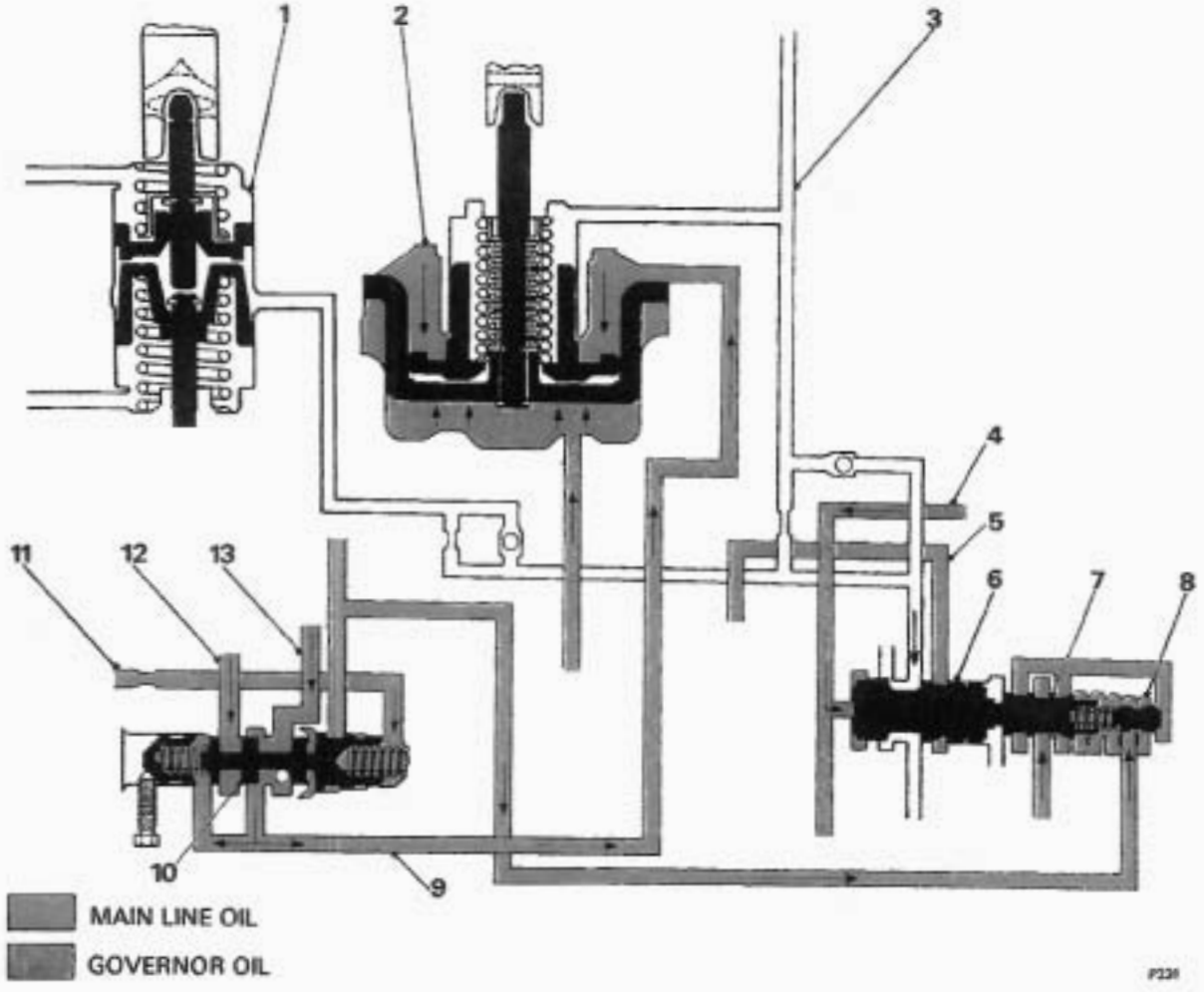

FIG. T196 LOW RANGE—1ST GEAR—REAR BAND APPLIED

1 Front servo
2 Rear servo
3 Intermediate clutch passage
4 Governor oil
5 Drive oil
6 1–2 valve
7 1–2 detent valve
8 Regulator valve
9 1–2 accumulator oil
10 1–2 accumulator valve
11 Modulator oil
12 Low oil
13 Drive oil

3. Remove the control valve unit, together with the two governor pipes (*see Fig. T198*).

Caution Ensure that the manual valve does not slide out of its bore. Take care to retain the front servo piston should it come out with the control valve assembly.

Remove the governor screen assembly from the end of the governor feed pipe or governor feed pipe hole.

4. Withdraw the governor pipes from the control valve assembly; the pipes are interchangeable and need not be marked for identification.

Note If the transmission is to be dismantled further, remove the stator connector (if fitted) from its connection in the case, then remove the detent (short) lead from the stator connector.

Control valve unit—To dismantle

1. Hold the control valve unit with the cored passages uppermost, and the accumulator piston bore to the front as shown in Figure T199.

2. Remove the manual valve from its bore.

3. Fit the control valve accumulator installing tool RH 7961 (J-21885) onto the accumulator piston.

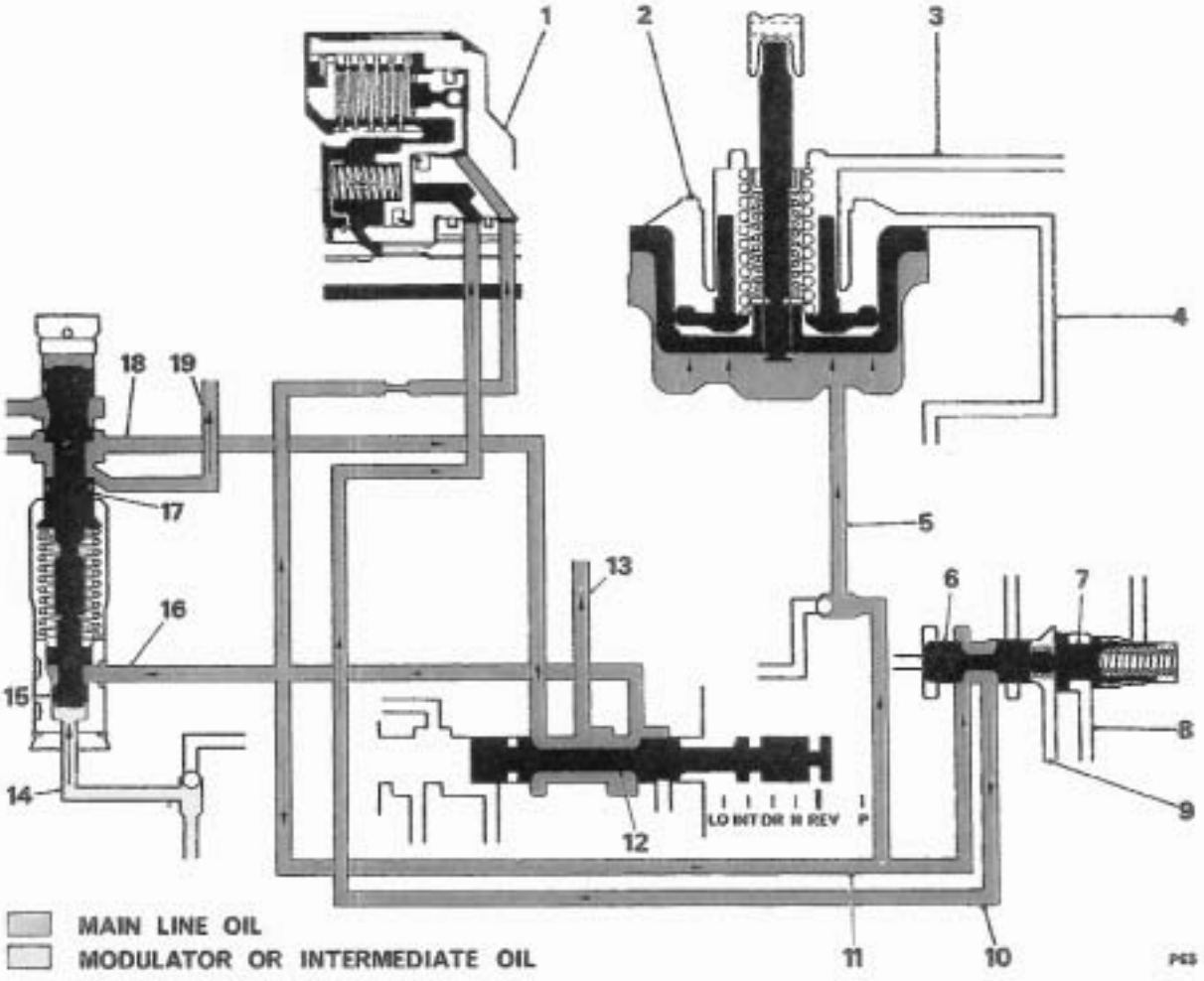

FIG. T197 REVERSE—REAR BAND APPLIED

1 Direct clutch (applied)
2 Rear servo applied
3 Intermediate clutch oil passage
4 1–2 accumulator oil passage
5 Reverse oil
6 2–3 valve
7 2–3 modulator valve
8 Detent oil passage
9 Intermediate oil passage
10 Direct clutch oil
11 Reverse oil
12 Manual valve
13 Servo oil
14 Modulator oil
15 Boost oil
16 Reverse oil
17 Pressure regulator
18 Line oil
19 Convertor oil

4. Compress the piston and remove the 'E' ring container.

5. Remove the accumulator control valve and spring.

6. Remove the retaining pin, 1–2 bushing, 1–2 regulator valve and spring from the upper right-hand bore.

7. Remove the 1–2 detent valve and the 1–2 valve.

8. Remove the retaining pin, 2–3 valve spring, 2–3 bushing, 2–3 modulator valve and the 2–3 intermediate spring from the middle right-hand bore.

9. Remove the 2–3 shift valve.

10. Remove the retaining pin, bore plug, 3–2 spring and spacer and the 3–2 valve from the lower bore.

11. Remove the retaining pin and bore plug from the upper left-hand bore, adjacent to the manual valve bore. Use an extractor to remove the pin from the back face of the valve.

12. Remove the bore plug, detent valve, detent regulator valve spring and the spacer.

13. Ensure that the 1–2 accumulator valve in the remaining bore is free, by moving the valve against the spring.

Note **Early cars only** The small adjusting screw on the outside of the 1–2 accumulator valve bore regulates accumulator valve pressure.

Printed in Great Britain
September 1971
T.S.D. 2476

Do not disturb the adjusting screw unless it is necessary to remove the valve to free it in the bore.

14. If it is necessary to remove the screw, its **exact** position must be determined before removal, using a 1·00 in. to 2·00 in. (2,5 cm. to 5,0 cm.) micrometer.
15. After removing any burrs, measure from the screw head to the machined surface of the valve body (*see Fig. T200*). Note the measurement.
16. Remove the adjusting screw.
17. Remove the 1–2 accumulator valve retaining pin from the machined surface of the valve body; remove the plug.
18. Remove the 1–2 accumulator sleeve, secondary spring and valve.
19. Remove the primary 1–2 accumulator valve and spring.

Control valve unit—To inspect

1. Wash in Trichlorethylene, the control valve unit body, valves and the remainder of the parts. Do not allow the valves to knock together as this may cause burrs, or damage to the shoulders of the valves.
2. Examine all valves and sleeves to ensure that they are free from dirt. Any burrs should be carefully removed with a fine stone, or crocus paper slightly moistened with oil. Do not round-off the shoulders of the valves.
3. When satisfactory, wash the parts and lightly smear all valves and bushings with clean transmission fluid.
4. All valves and bushes should be tested in their individual bores to ensure that free movement is obtainable.
5. The valves should fall under their own weight, with perhaps a slight tapping of the valve body to assist them. During these checks, ensure that the valves and valve bores are not in any way damaged.
6. The manual valve is the only valve that can be renewed separately. If other valves are damaged or defective, a new control valve unit must be fitted.
7. Examine the valve body for cracks or scored bores.
8. Ensure that the cored face is free from damage.
9. Examine all springs for collapsed or distorted coils.

Control valve unit—To assemble

Before commencing assembly, ensure that all springs can be positively identified, otherwise the transmission will not function correctly. Refer to Figure T199 during assembly procedure.

1. Lightly lubricate all parts with clean transmission fluid before assembly.
2. Fit the front accumulator spring and piston into the valve body.
3. Fit the valve body accumulator installing tool RH 7961 (J-21885). Align the piston and spring with the bore then compress the spring and piston (*see Fig. T201*).

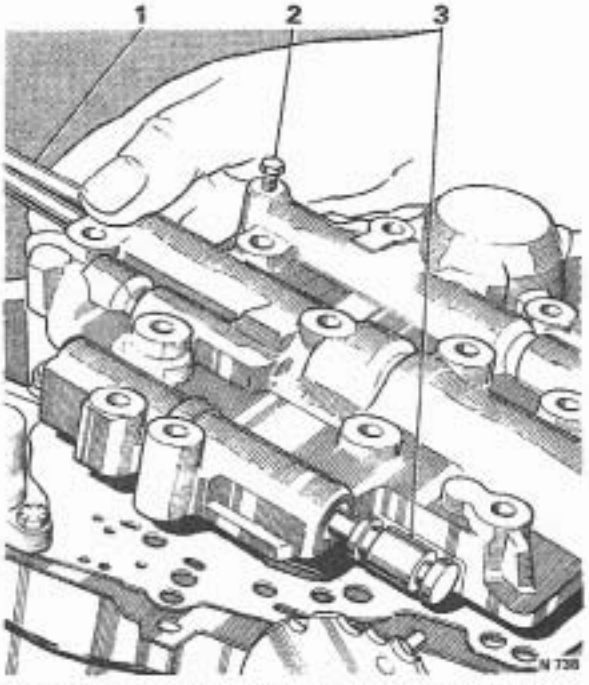

FIG. T198 REMOVING THE CONTROL VALVE UNIT

1 Governor pipes
2 Accumulator valve pressure adjusting screw (early cars only)
3 Manual valve

4. Secure the piston with the 'E' ring retainer.
5. If the 1–2 accumulator valve train has been removed, fit the 1–2 primary spring into the primary 1–2 accumulator valve.
6. Fit the valve and spring into the lower left-hand bore, spring first.
7. Use a retaining pin as a retractor to hold the valve in its operating position.
8. Fit the 1–2 accumulator valve (wide land first) into the 1–2 accumulator sleeve.
9. Fit the 1–2 accumulator sleeve into its bore.
10. Fit the retaining pin.
11. Fit the 1–2 accumulator valve secondary spring and the 1–2 accumulator plug into the sleeve.
12. Fit the adjusting screw to conform to its original micrometer measurement.
13. Fit the detent spring and spacer into the next left-hand bore above.
14. Compress the spring and hold it with a small screwdriver.
15. Fit the detent regulator valve, wide land first.
16. Fit the detent valve, small land first.
17. Fit the bore plug with the hole facing the outside then fit the retaining pin. Remove the screwdriver.
18. Fit the 3–2 valve into the lower right-hand bore.

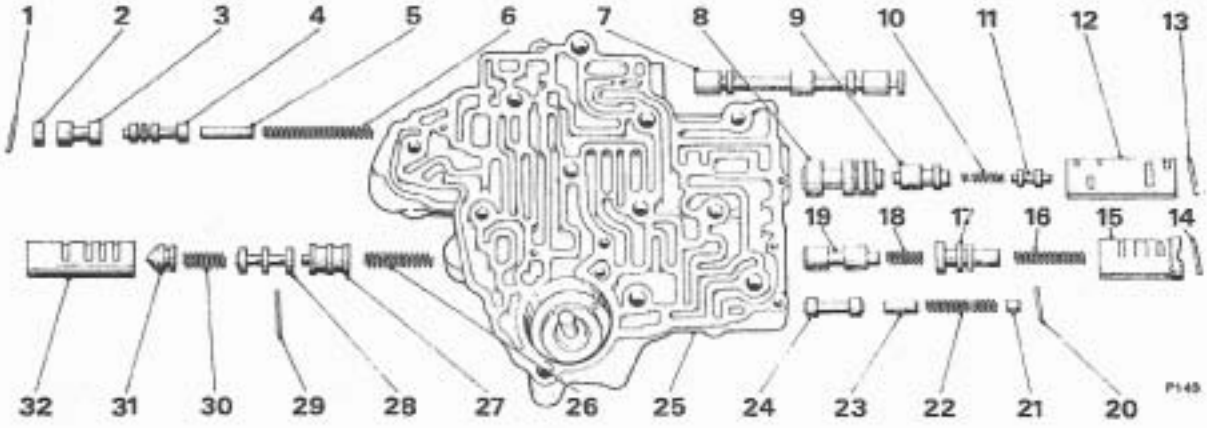

FIG. T199 CONTROL VALVE UNIT

1 Retaining pin
2 Bore plug
3 Detent valve
4 Detent regulator
5 Spacer
6 Detent spring
7 Manual valve
8 1–2 valve
9 1–2 detent valve
10 1–2 regulator spring
11 1–2 regulator valve
12 1–2 sleeve
13 Retaining pin
14 Retaining pin
15 2–3 sleeve
16 2–3 valve spring
17 2–3 modulator valve
18 2–3 intermediate spring
19 2–3 valve
20 Retaining pin
21 Bore plug
22 3–2 spring
23 Spacer
24 3–2 valve
25 Valve body
26 Primary spring
27 Primary 1–2 accumulator valve
28 Retaining pin
29 1–2 accumulator valve
30 Secondary spring
31 Bore plug
32 1–2 accumulator sleeve

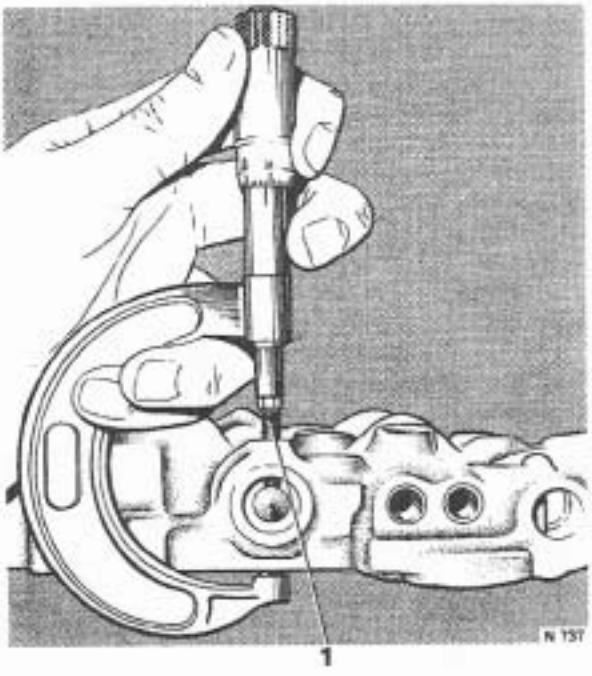

FIG. T200 MEASURING THE ADJUSTING SCREW (EARLY CARS)

1 Accumulator valve pressure adjusting screw

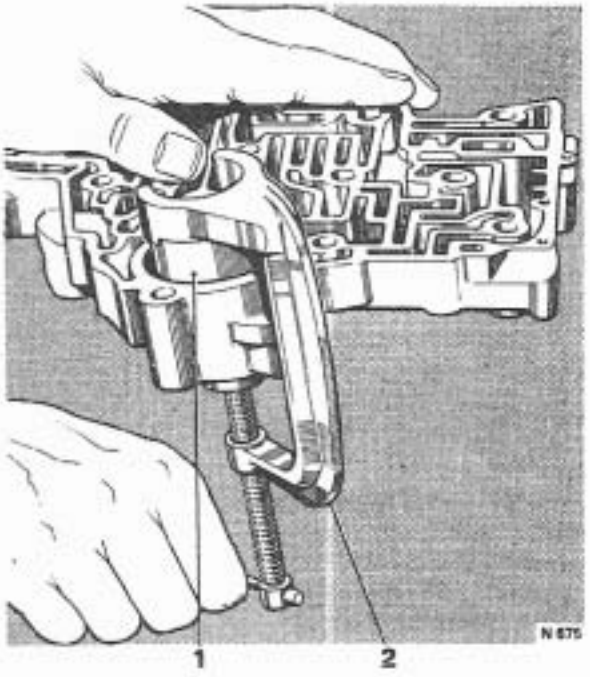

FIG. T201 FITTING THE ACCUMULATOR AND SPRING

1 Accumulator piston
2 Inserting tool

Printed in Great Britain
September 1971
T.S.D. 2476

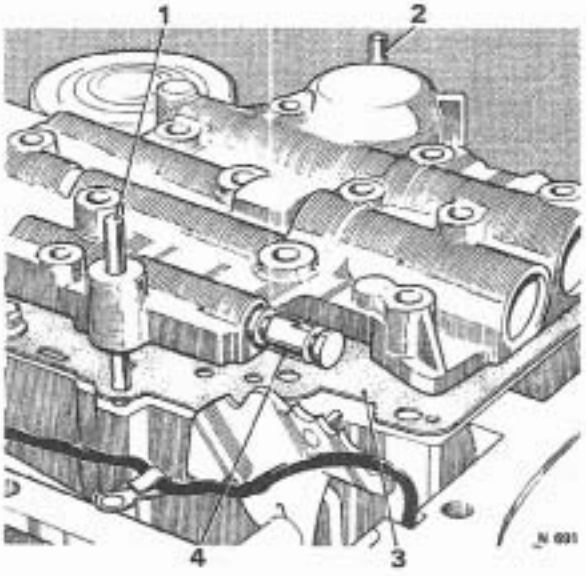

FIG. T202 FITTING THE CONTROL VALVE UNIT

1 Guide pin
2 Guide pin
3 Gasket
4 Manual valve

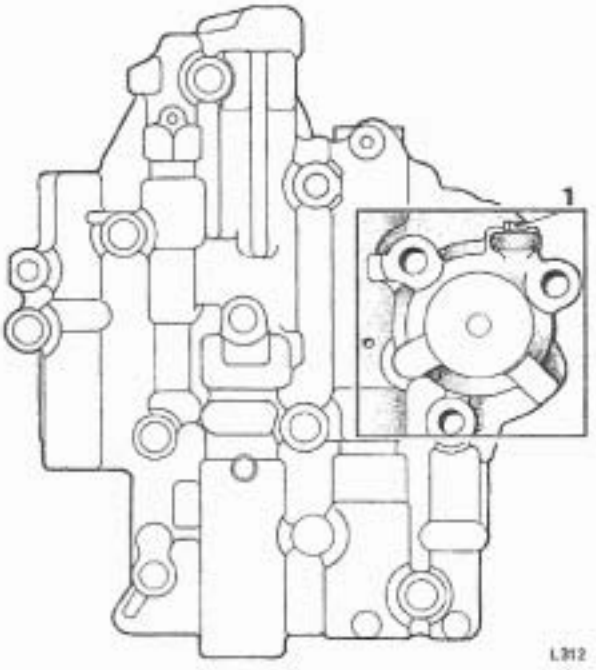

FIG. T204 PRESSURE SWITCH PLUG—REPLACEMENT CONTROL VALVE ASSEMBLY

1 Pressure switch pipe plug

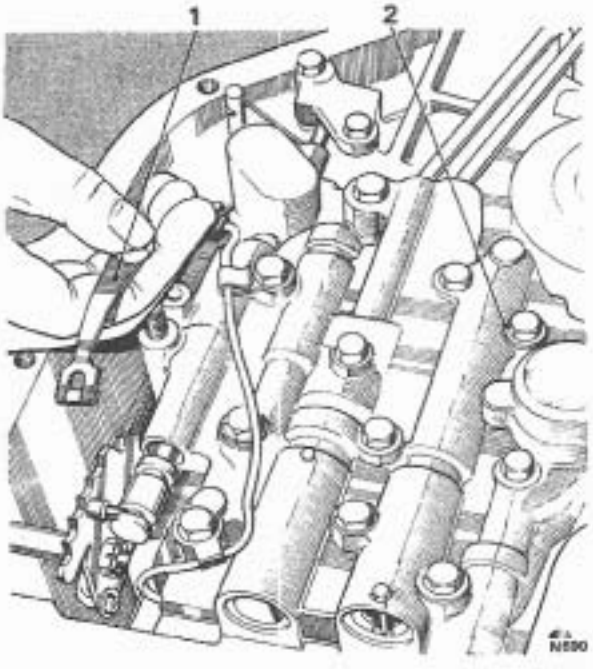

FIG. T203 FITTING THE DETENT SPRING AND ROLLER

1 Detent spring
2 Washer

19. Fit the 3–2 spring, spacer, bore plug with the hole facing the outside, and the retaining pin.
20. Fit the 2–3 shift valve, with the stem facing the outside, in the next right-hand bore above.
21. Fit the 2–3 intermediate spring.
22. Fit the 2–3 modulator valve into the sleeve, then fit both parts into the valve bore.
23. Fit the 2–3 valve spring and the retaining pin.
24. Fit into the next right-hand bore above, the 1–2 shift valve — small diameter first — then fit the 1–2 spring.
25. Fit the 1–2 regulator valve, spring and detent valve into the sleeve. Align the spring in the bore of the detent valve. Fit the parts into the valve bore.
26. Push in the sleeve against spring pressure then fit the retaining pin.
27. Fit the manual valve with the detent pin groove to the right-hand side (outmost).

Control valve unit—To fit

If a service replacement control valve assembly is to be fitted, ensure the switch pipe plug (if fitted) situated in the tapped hole adjacent to the front accumulator pocket is securely tightened in position.

1. Fit the governor pipes to the control valve unit.

Note Fit the governor screen assembly, **open end first** into the governor feed pipe hole (*hole nearest the centre of transmission*).

2. Using two guide pins screwed into the casing, fit the control valve unit into position (*see Fig. T202*).

3. Ensure that the gasket and oil guide plate (spacer) are correctly positioned.

Note It is important that only a gasket which is a genuine service part be used.

4. Ensure that the governor pipes are correctly aligned and the feed pipe fits over the governor screen.

5. On later transmissions when installing the governor assembly ensure that a clearance of approximately 0·250 in. (0,64 cm.) is maintained between the governor pipes and transmission case, at a point 1·00 in. (2,54 cm.) from the right angle bend of the pipes.

Ensure that the manual valve is correctly located by the pin on the detent lever.

6. Remove the guide pins and fit the control valve unit securing setscrews; do not fit the detent spring and roller securing screw.

7. Torque tighten the securing screws (*see Chapter P*).

8. Ensure that the stator lead is secured to the clips.

9. Fit the detent spring and roller assembly (*see Fig. T203*); fit the securing screw and torque tighten it to 8 lb. ft. (1,1 kg. m.) (*Chapter P*).

10. Fit the short (detent) lead to the stator connector (if it was removed) then fit the connector to the case.

Printed in Great Britain
September 1971
T.S.D. 2476

Section T16
REAR SERVO

The rear servo comprises an assembly of pistons and springs, and fits onto the bottom face of the transmission casing, adjacent to the control valve unit. It is secured to the casing by six setscrews. The purpose of the servo is to act as an accumulator to absorb an amount of intermediate clutch oil, thus cushioning the application of the clutch, also to apply the rear friction band in Low range and Reverse.

Drive—Intermediate—first gear

In first gear, Drive and Intermediate ranges, 1–2 accumulator oil is directed to the rear servo accumulator piston in preparation for the 1–2 up-change.

Drive—Intermediate—second gear

Intermediate clutch apply oil is directed to the rear servo accumulator piston, stroking the piston against the 1–2 accumulator oil and the accumulator spring (*see Fig. T205*). This action absorbs an amount of intermediate clutch apply oil and permits the intermediate clutch to apply at reduced pressure for a smooth 1–2 up-change.

Low range—first gear

Overrun engine braking in Low range — first gear is provided by the rear servo which applies the rear band and prevents the reaction carrier from rotating clockwise (*see Fig. T206*).

The 1–2 accumulator oil is directed to the accumulator piston which attempts to prevent application of the servo. Low range oil is directed to the servo piston which, because it has a larger area, applies the rear band. Because 1–2 oil is present and is opposing the movement of the piston, the pressure applying the rear band is reduced. This provides a smooth band application.

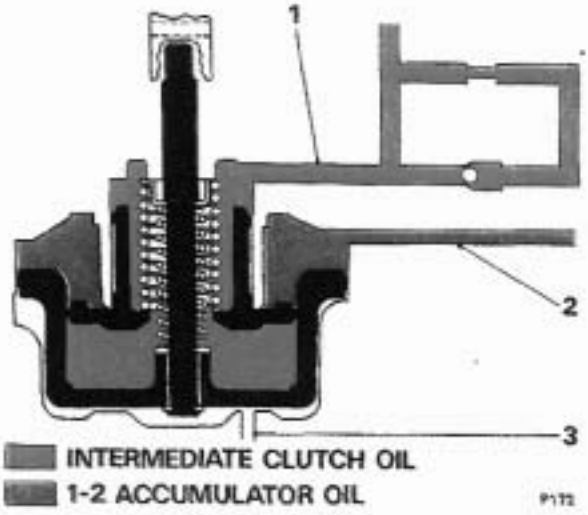

FIG. T205 DRIVE AND INTERMEDIATE—2ND GEAR

1 Intermediate clutch oil
2 1–2 accumulator oil
3 Reverse or low oil

Low range—second gear

In second gear the rear band is released. Intermediate clutch oil is directed to the release side of the servo piston which, with line oil in the 1–2 accumulator oil passage, balances out the Low range oil on the apply side of the servo piston (*see Fig. T207*). The servo release spring then strokes the servo piston to the band release position.

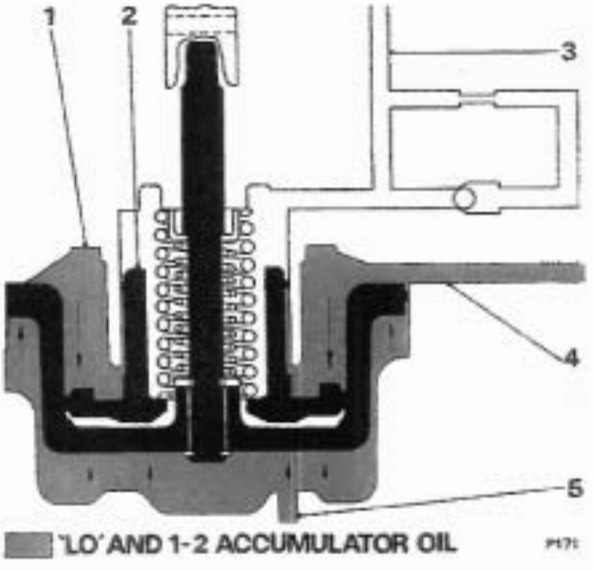

FIG. T206 LOW RANGE—1ST GEAR

1 To intermediate clutch
2 1–2 accumulator oil
3 Low range oil
4 Rear servo piston (applying)
5 Accumulator piston (resisting servo piston)

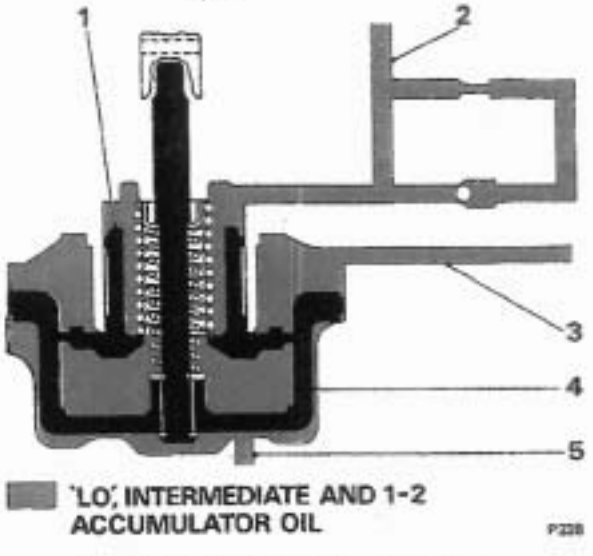

FIG. T207 LOW RANGE—2ND GEAR

1 Accumulator piston
2 To intermediate clutch
3 1–2 accumulator oil
4 Servo piston
5 Low range oil

Reverse

In Reverse, the rear band is applied to hold the reaction carrier. Reverse oil is directed to the servo piston to apply the band (*see Fig. T208*). To ensure that the rear band will hold the reaction carrier for the reverse gear ratio, line pressure is increased. No other oil is present in the servo to resist the movement of the servo piston.

Rear servo—To remove

The rear servo can be removed whether the transmission is removed from the car or not.

1. Remove the sump (*see Section T14*).
2. Remove the control valve unit (*see Section T15*).
3. Remove the six setscrews which secure the servo cover to the transmission casing.
4. Remove the cover and discard the gasket.
5. Remove the servo unit from the casing (*see Fig. T209*).
6. Remove the servo accumulator spring.

To ensure that the rear band is correctly adjusted when the rear servo is fitted, the apply pin must be checked as follows.

Rear band apply pin—To select

1. Fit the band apply pin selector gauge RH 7957 (J-21370-5) onto the bottom face of the transmission casing. The gauge must fit over the rear servo bore with the hexagonal nut on the side of the gauge facing the parking brake linkage, and the smaller diameter end of the gauge pin RH 7957 (J-21370-5) in the servo pin bore (*see Fig. T210*).
2. Secure the gauge with two suitable setscrews e.g. rear servo cover screws; torque tighten the screws. (*see Chapter P*).
3. Ensure that the stepped gauge pin moves freely in the tool and in the servo pin bore. The stepped side of the pin must face the front of the transmission case.
4. Band apply pins are available in three sizes as shown in the following chart.

IDENTIFICATION	LENGTH
Three rings	Long
Two rings	Medium
One ring	Short

5. The identification ring is located on the band lug end of the pin. Selecting the correct pin is the equivalent of adjusting the rear band.
6. To determine the correct size pin to use, apply 25 lb. ft. (3,46 kg. m.) to the hexagonal nut on the side of the gauge (*see Fig. T210*). This will cause the lever on top of the gauge to depress the stepped gauge pin into the servo pin bore, simulating the actual operation of the servo.

Printed in Great Britain
September 1971
T.S.D. 2476

7. Note the relationship between the steps on the gauge pin and the machined surface on the top of the gauge.
8. If the machined surface on top of the gauge is level with, or even above the upper step on the gauge pin, a long (3 rings) pin is required.
9. If the machined surface on top of the gauge is between the upper and lower steps on the gauge pin, a medium pin (2 rings) is required.
10. If the machined surface on top of the gauge is level with, or below the lower step on the gauge pin, a short (1 ring) is required.
11. If a new pin is required, make a note of the size of the required pin, then remove the gauge from the transmission.

Rear servo—To dismantle

1. Remove the rear accumulator piston from the rear servo piston (*see Fig. T211*).
2. Remove the 'E' ring which retains the rear servo piston on the band apply pin.
3. Remove the rear servo piston and the seal from the band apply pin.
4. Remove the washer, spring and retainer.

Rear servo—To inspect

1. Check the fit of the oil sealing rings in the accumulator piston. The rings should be free to turn in the grooves with a maximum clearance of 0·003 in. (0,076 mm.).
2. Fit the accumulator piston lower oil sealing ring into its bore in the casing and check the ring-to-bore fit.
3. Check the fit of the band apply pin in each piston.
4. Examine the band apply pin for scores, cracks or the opening of drilled passages.
5. Examine the accumulator piston for an open bleed passage.
6. Ensure that the pin is the correct size as determined by the check under heading 'Rear band apply pin — To select'.

Rear servo—To assemble

1. Fit the spring retainer (open end first), spring and washer onto the band apply pin.
2. Fit the servo piston onto the pin and secure it with the 'E' ring.
3. If necessary, fit a new oil seal ring onto the servo piston.
4. If they were removed for cleaning purposes, fit the oil sealing rings onto the accumulator piston.
5. Fit the accumulator piston into the servo piston.

Transmissions with a **Serial Number 71-RR-1287 and onwards,** have a 'Teflon' oil sealing ring fitted to the large diameter ring groove of the rear accumulator piston (*see Fig. T212*).

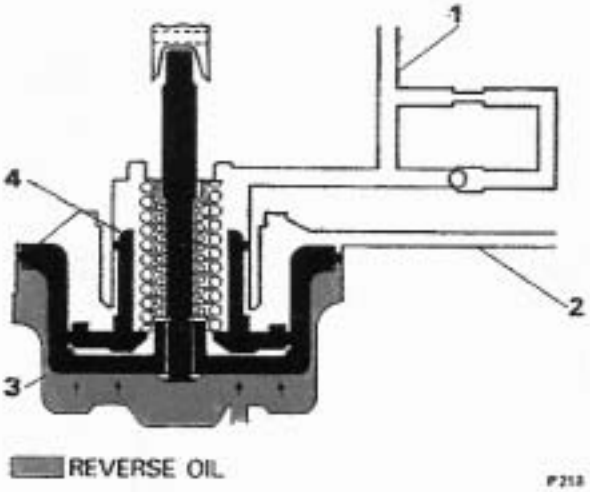

FIG. T208 REAR SERVO IN REVERSE POSITION

1 Accumulator piston
2 To intermediate clutch
3 1–2 accumulator passage
4 Rear servo piston (applying)

The 'Teflon' type of oil sealing ring requires a shallower machined ring groove in the piston and therefore, the two types of pistons and rings are **not** interchangeable as individual items.

As a complete assembly with their respective large diameter piston ring fitted, the early and late rear accumulator pistons are interchangeable.

The smaller diameter piston ring and ring groove have not been changed.

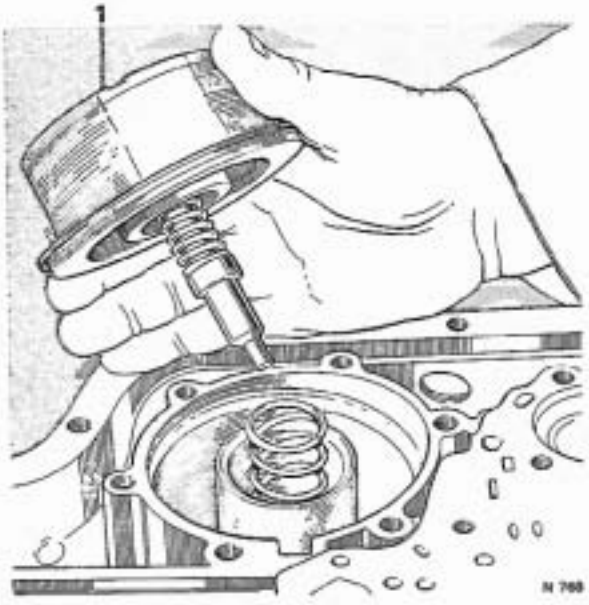

FIG. T209 REMOVING THE REAR SERVO

1 Rear servo

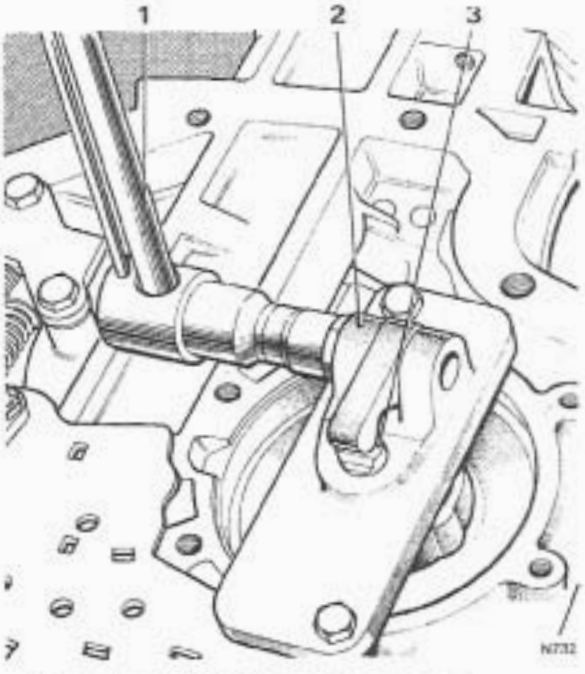

FIG. T210 SELECTING THE BAND APPLY PIN

1 Torque spanner
2 Gauge
3 Gauge pin

Rear servo—To fit

1. Using clean transmission fluid, lightly lubricate the inner and outer rear servo bores in the transmission casing.
2. Fit the servo accumulator spring into the servo inner bore.

Note Before fitting the rear servo to the casing, ensure that the rear band apply lug is aligned with the servo pin bore in the transmission casing. If the lug is not aligned, the servo will not apply the rear band.

3. Position the rear servo assembly in the transmission casing.
4. Using hand pressure, push the servo into the transmission casing, ensuring that the servo piston sealing ring is correctly seated in the bore.
5. Fit a new gasket and fit the cover.
6. Torque tighten the six setscrews (*see Chapter P*).

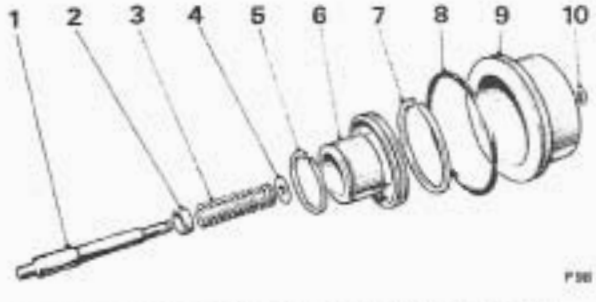

FIG. T211 REAR SERVO AND ACCUMULATOR—EXPLODED

1 Servo pin
2 Spring retainer
3 Servo spring
4 Washer
5 Oil sealing ring
6 Accumulator piston
7 Oil sealing ring
8 Servo oil seal
9 Servo piston
10 'E' ring

Printed in Great Britain
September 1971
T.S.D. 2476

Section T17
DETENT SOLENOID, CONNECTOR, CONTROL VALVE SPACER and FRONT SERVO

The detent solenoid is secured to the lower face of the transmission casing and is connected by a lead to a connector on the left-hand side of the transmission. When the solenoid receives a signal from a micro-switch at full throttle (kick-down button depressed) a needle valve is caused to move and an exhaust port is opened behind the detent valve. This allows the detent valve spring to move the detent valve and allow oil at high pressure to be fed to the shift valves to oppose governor pressure (*see Forced down-change — kick-down — Section T15 — Control Valve Unit*).

The control valve spacer fits between the control valve unit and the transmission casing and forms part of the hydraulic system which contains restrictors and check balls.

The front servo is an assembly of pistons and springs, similar to the rear servo. It fits partly in the transmission casing and partly in the control valve unit. The servo applies the front band in Intermediate range — second gear and Low range — second gear, to provide engine braking. It is used also as an accumulator for the application of the direct clutch and, in conjunction with the check balls and orifices, is part of the timing for the release of the direct clutch.

Front servo operation

Drive range—first gear

In Drive range, servo oil from the manual valve charges the accumulator by stroking both the accumulator piston and the servo piston against the accumulator spring. This prepares the accumulator for the controlled application of the direct clutch during the 2–3 up-change. The charging of the accumulator in Drive range, first gear, also makes it possible to have a controlled 1–3 let-up change as the accumulator is prepared in first gear for direct clutch application.

Servo oil and the servo release spring prevent the application of the band in second gear — Drive range, when intermediate clutch apply oil is directed between

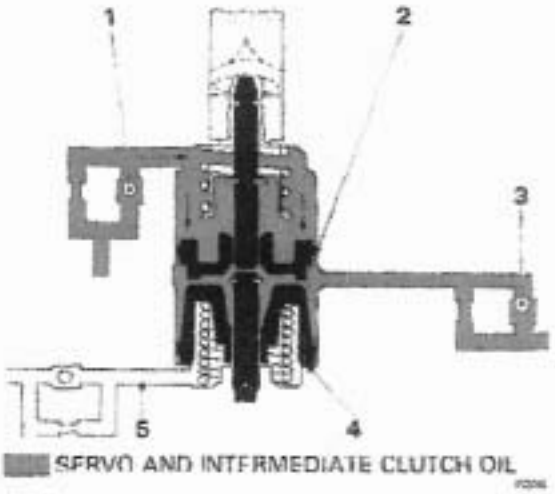

FIG. T212 DRIVE RANGE—2ND GEAR

1 Check ball (seated)
2 Servo piston
3 Intermediate clutch oil check ball (seated)
4 Accumulator piston
5 Direct clutch passage
6 Servo oil

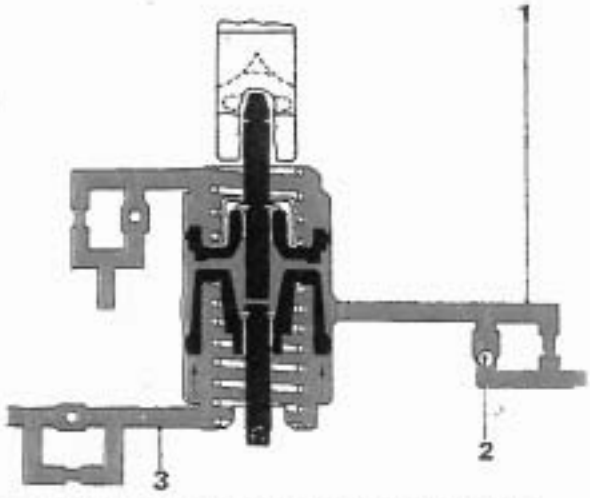

DIRECT CLUTCH AND INTERMEDIATE CLUTCH OIL

FIG. T213 DRIVE RANGE—3RD GEAR

1 Intermediate clutch oil
2 Check ball
3 Direct clutch oil

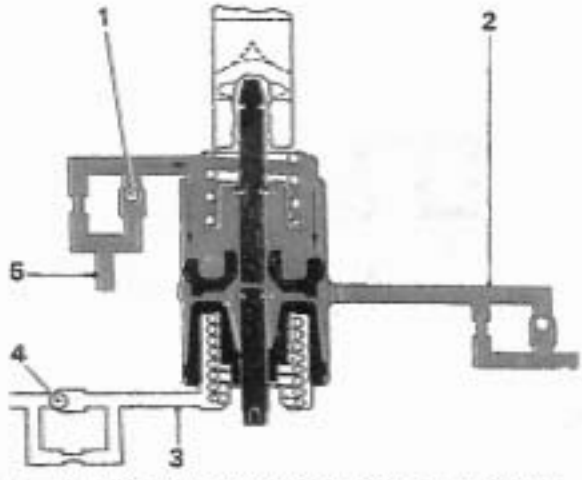

SERVO AND INTERMEDIATE CLUTCH OIL

FIG. T214 DRIVE RANGE—3-2

1 Check ball (seated)
2 Intermediate clutch oil
3 Direct clutch passage
4 Check ball (seated)
5 Servo oil

the servo and accumulator pistons. Servo oil is also present in Reverse and Neutral.

Drive range—second gear

In Drive range — first and second gears, the accumulator is charged with servo oil (*see Fig. T212*). In second gear, intermediate clutch oil is fed between the servo and accumulator pistons but does not force them apart. This is because the force of the servo oil which holds the piston down is equal to the intermediate clutch oil pressure.

Drive range—third gear

When the direct clutch is applied, intermediate clutch oil pressure increases. This increased pressure, plus the accumulator spring, overcomes the servo oil pressure and the accumulator piston is moved until it reaches the stop on the pin (*see Fig. T213*). As the accumulator piston moves, it abuts the servo piston which moves a corresponding distance, until it contacts a washer on the servo pin; it will not, however, move any further and the front band will not be applied.

As the accumulator piston moves, an amount of direct clutch oil is absorbed and this permits the direct clutch to apply at a controlled rate for a smooth 2–3 up-change.

Drive range—3-2

The release of the direct clutch is controlled by the front servo, two orifices and two check balls. This allows the driving load to be transferred smoothly to the intermediate roller.

The controlled release pressure allows the engine to increase its r.p.m. to suit the lower gear ratio of second gear during detent down-changes, resulting in a smooth change with better acceleration.

During the stroking of the servo and accumulator pistons, servo oil seats a check ball and the oil must pass through a restrictor. This slows down the stroking of the pistons (*see Fig. T214*).

The exhausting oil from the accumulator and the direct clutch seats another check ball and the oil is forced to flow through an orifice. This controls the clutch pressure during direct clutch release.

Intermediate range—second gear

During a manual 3–2 down-change, intermediate clutch oil from the 1–2 shift valve seats a check ball and flows through an orifice to apply the front band (*see Fig. T215*). The oil which applies the band is controlled also by the stroking of the accumulator piston which is resisted by the accumulator spring and the restricted exhaust of direct clutch oil.

Detent solenoid, connector, control valve spaces and front servo—To remove

The units may be removed from the transmission whether the transmission is removed from the car or not.

Printed in Great Britain

September 1971

T.S.D. 2476

1. Drain the transmission fluid and remove the sump.
2. Remove the control valve unit and governor pipes (*see Section T15 — Control Valve Unit*).
3. Disconnect the solenoid lead(s) from the connector terminals.
4. Compress the tabs on the connector and remove the connector and 'O' ring from the casing; discard the 'O' ring.
5. Remove the two setscrews which secure the detent solenoid.
6. Remove the solenoid and gasket.
7. Remove the control valve spacer plate and gasket.

Note If the last operation is being carried out with the transmission in the car, lower the control valve spacer plate in a level plane so that the check balls do not fall out. Remove the check balls from the spacer plate.

8. Remove the six check balls from the cored passages in the transmission case (*see Fig. T216*).
9. Lift the front servo piston, washer, pin, retainer and spring from the transmission case. An exploded view of the front servo is shown in Figure T217.

Front servo—To inspect

1. Examine the servo pin for damage.
2. Examine for damage the oil seal ring groove in the piston.
3. Ensure that the ring is free in the groove.
4. Examine the piston for cracks and other damage.
5. Check the fit of the servo pin in the piston.

Detent solenoid, connector, control valve spacer and front servo—To fit

'Teflon' oil sealing rings are fitted to **Transmission Serial Number 70-RR-2626 and onwards.** Therefore, when overhauling the front servo or front accumulator piston it will be noticed that the 'Teflon' ring allows the piston to slide very freely in its bore. This is a normal characteristic of the ring and does not indicate leakage during operation.

When servicing pistons fitted with 'Teflon' oil sealing rings the following points should be noted.

Only remove a 'Teflon' oil sealing ring from a piston ring groove if the ring is to be renewed.

Only renew a 'Teflon' oil sealing ring if it shows evidence of leaking during operation or visual damage.

When changing a 'Teflon' oil sealing ring, renew with the current aluminium (front servo) or cast iron (front accumulator) service rings.

Note The front accumulator piston, front servo piston and related parts are changed on 1971 transmissions and onwards; individual parts are not inchangeable (*see Fig. T218*).

1. Fit the front servo spring and retainer into the bore of the transmission casing.

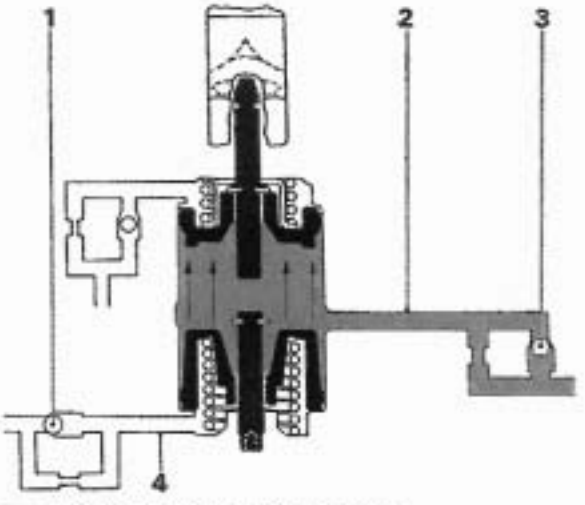

INTERMEDIATE CLUTCH OIL

FIG. T215 INTERMEDIATE RANGE—2ND GEAR

1 Check ball
2 Intermediate clutch oil
3 Check ball
4 Direct clutch passage

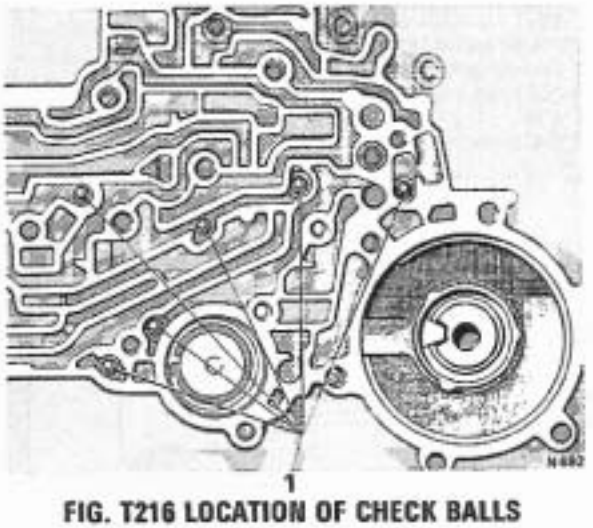

FIG. T216 LOCATION OF CHECK BALLS

1 Check balls

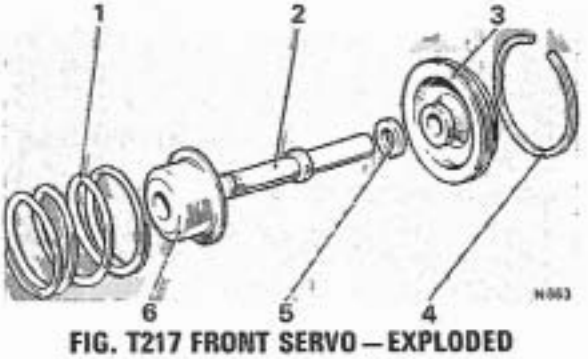

FIG. T217 FRONT SERVO—EXPLODED

1 Spring
2 Pin
3 Piston
4 Oil seal ring
5 Washer
6 Spring retainer

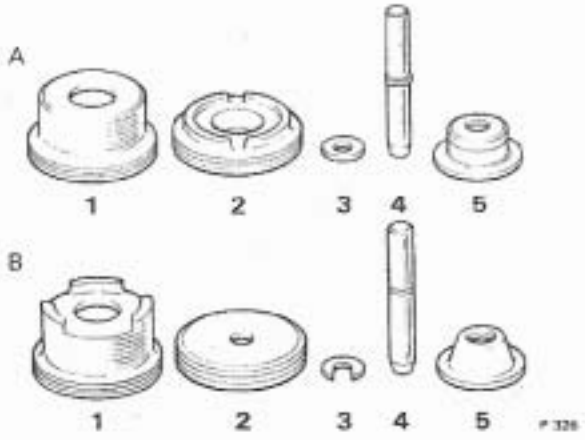

FIG. T218 IDENTIFICATION OF FRONT SERVO AND FRONT ACCUMULATOR COMPONENTS

A 1965 through to 1970 components
1 Accumulator piston
2 Servo piston
3 Washer — front servo piston
4 Pin front servo piston
5 Retainer front servo spring

B 1971 components
1 Accumulator piston
2 Servo piston
3 'C' ring — front servo piston
4 Pin — front servo piston
5 Retainer — front servo spring

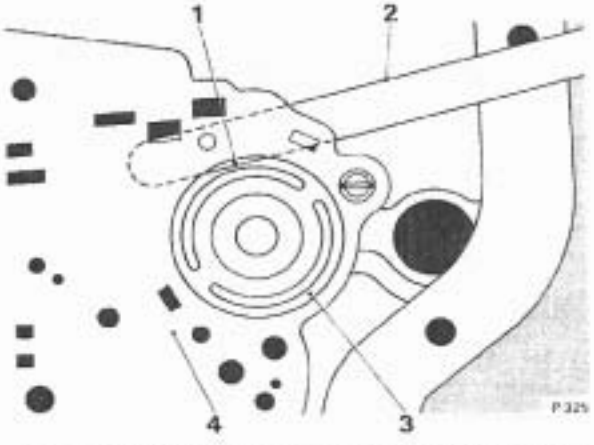

FIG. T219 METHOD OF TEMPORARILY HOLDING FRONT SERVO PISTON IN POSITION (TRANSMISSION INSTALLED IN A VEHICLE)

1 Locate feeler gauge in this position, allowing accumulator piston to enter the front servo piston before the feeler gauge is withdrawn
2 Feeler gauge
3 Front servo piston
4 Spacer plate

2. Fit the flat washer onto the front servo pin on the end opposite to the taper.
3. Fit the pin into the casing so that the tapered end contacts the forward band.
4. Fit the piston ring to the piston if it was removed.
5. Fit the piston onto the band apply pin so that the number on the shoulder of the piston faces toward the sump.

Note If the front servo assembly is to be fitted with the transmission in the car, hold temporarily in position until the accumulator piston has entered the front servo piston by means of a length of clean 0·020 in. (0,508 mm.) feeler gauge position across the servo piston as shown in Figure T219. Withdraw the feeler gauge before tightening the control valve body bolts.

6. Check the piston for freedom of movement by pushing it against the spring.
7. Fit the six check balls into the ball seat pockets in the transmission casing (*see Fig. T216*).

Note If the operation is being performed with the transmission in the car, fit the check balls into the ball seat pockets on the spacer plate.

8. Fit the case-to-spacer gasket (gasket with an extension for the detent solenoid).
9. Fit the control valve spacer.
10. Fit the control valve-to-spacer gasket (gasket with slot).
11. Fit the detent solenoid gasket.
12. Fit the detent solenoid assembly with the connector facing the outer edge of the casing. Fit the securing setscrews but do not tighten them.
13. Fit a new 'O' ring onto the solenoid connector.
14. Fit the connector with the lock tabs pointing into the casing.
15. Bend up the locating tabs on the side of the casing.
16. Fit the solenoid and stator leads to the connector terminals.
17. Fit the control valve unit as described in Section T15 then torque tighten the two solenoid securing setscrews (*see Chapter P*).

Printed in Great Britain
September 1971
T.S.D. 2476

Section T18
REAR EXTENSION

Rear extension—To remove

This Section describes the procedure for removal of the rear extension when the transmission is fitted to the car.

The procedure is the same when the transmission is removed from the car except that the gearchange actuator and the propeller shaft will have been removed.

1. Remove the gearchange electric actuator as described in Section T18.
2. Remove the propeller shaft as described in Chapter F.
3. Place a drip tray beneath the rear extension.
4. Remove the coupling flange by withdrawing it from the output shaft.
5. Remove the six setscrews which secure the rear extension to the transmission casing.
6. Slide the rear extension rearward and downward until it clears the output shaft.

Caution Make certain that the output shaft splines do not damage the oil seal in the end of the rear extension.

7. Remove and discard the square section 'O' ring or gasket, whichever is fitted, from the rear extension.

Rear extension—To inspect

1. Examine the rear extension for cracks or damage.
2. Examine the bush for excessive wear or damage.
3. Examine the oil seal for damage.
4. If a new oil seal is to be fitted, push out the old seal using a suitable drift.
5. Ensure that the bore in which the seal fits is clean and free from damage and that the seal drain-back port is not obstructed.
6. Lightly smear with Wellseal the outer edge of the new seal then, drive in the seal using tool RH 7953 (J-21359).

Note The webbing on the seal installation tool RH 7953 (J-21359) must be undercut by approximately 0·125 in. (3,17 mm.) as shown in Figure T220.

7. Ensure that the rear face of the transmission casing and the front face of the extension are clean and free from burrs.

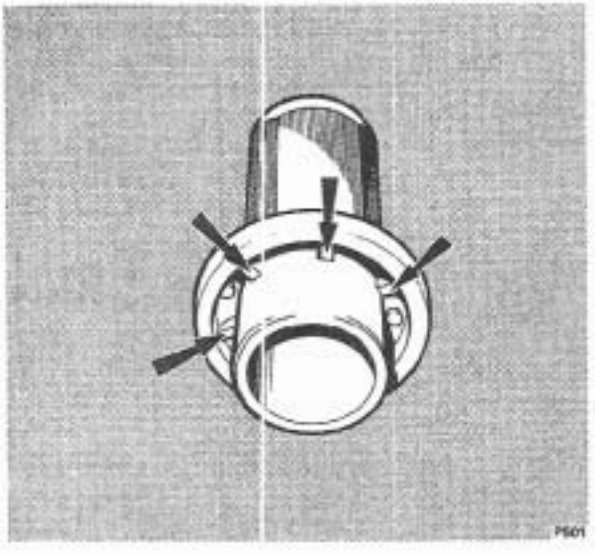

FIG. T220 UNDER CUTTING WEBBING OF SEAL INSTALLATION TOOL RH 7953 (J-21359)

Rear extension—To fit

1. Fit a new square sectioned 'O' ring or a gasket, whichever was removed, onto the extension housing.
2. Carefully fit the extension casing over the output shaft until the extension abuts the rear of the transmission casing.
3. Ensure that the splines on the output shaft do not touch the oil seal in the end of the extension casing otherwise the seal lip may be damaged.
4. Fit the six setscrews and torque tighten them to the figure specified in Chapter P.
5. Fit the coupling flange.
6. Fit the propeller shaft.
7. Fit the electric actuator.

Printed in Great Britain

Section T19
OIL PUMP

September 1971

The oil pump is an internal/external gear type which is secured to the front face of the transmission housing. The oil pump cover contains an oil pressure regulator valve train, a stator valve and an heat exchanger by-pass valve. The pump is connected mechanically to the engine flexplate and operates whenever the engine is running.

As the engine flexplate revolves it turns the torque converter pump which is keyed to the inner gear of the oil pump. The inner gear turns the outer gear and causes oil to be lifted from the transmission sump via an oil strainer.

As the gears turn, the oil is carried in pockets formed by the gear teeth, past a crescent shaped projection of the pump. Beyond the crescent, the gear teeth move closer together causing the oil to be squeezed out at pressure from between the teeth. At this point the oil is delivered through the pump outlet to the pressure system (*see Fig. T221*).

T.S.D. 2476

The oil pressure is controlled by a pressure regulator valve. As the pressure builds up, the oil is directed through an orifice to the top of the pressure regulator valve. When the desired pressure is reached, the valve moves against spring pressure, opening a passage to feed the torque converter.

When the torque converter is full, oil returns to the transmission heat exchanger by way of an external pipe. Upon leaving the heat exchanger, the oil is fed by way of another external pipe to the transmission lubricating system.

Should the heat exchanger become obstructed, returning oil is diverted to the by-pass valve, unseating the valve and permitting oil to flow directly to the lubrication system.

As pressure continues to increase, the pressure regulator valve moves to expose a port which directs excess oil to the suction side of the pump. The pressure regulator valve is spring-balanced to regulate line pressure at approximately 70 lb/sq. in. (4.9 kg/sq. cm.).

Note There is a change to the regulator valve fitted to 1971 onwards transmission. Early transmissions (prior to 1971) were fitted with a regulator valve having oil holes and an orifice cup plug. later transmissions (1971 onwards) have a solid type of regulator valve. The solid type of valve must only be fitted to a pump cover with a squared off pressure regulator boss (*see Fig. T222*). The earlier type of valve with oil holes and cup plug can be used to service either type of pump cover.

Oil pump—To remove

1. Remove the transmission from the car.

2. Remove the sump and oil strainer.

3. Remove the stator solenoid lead (if fitted) from the connector in the transmission casing.

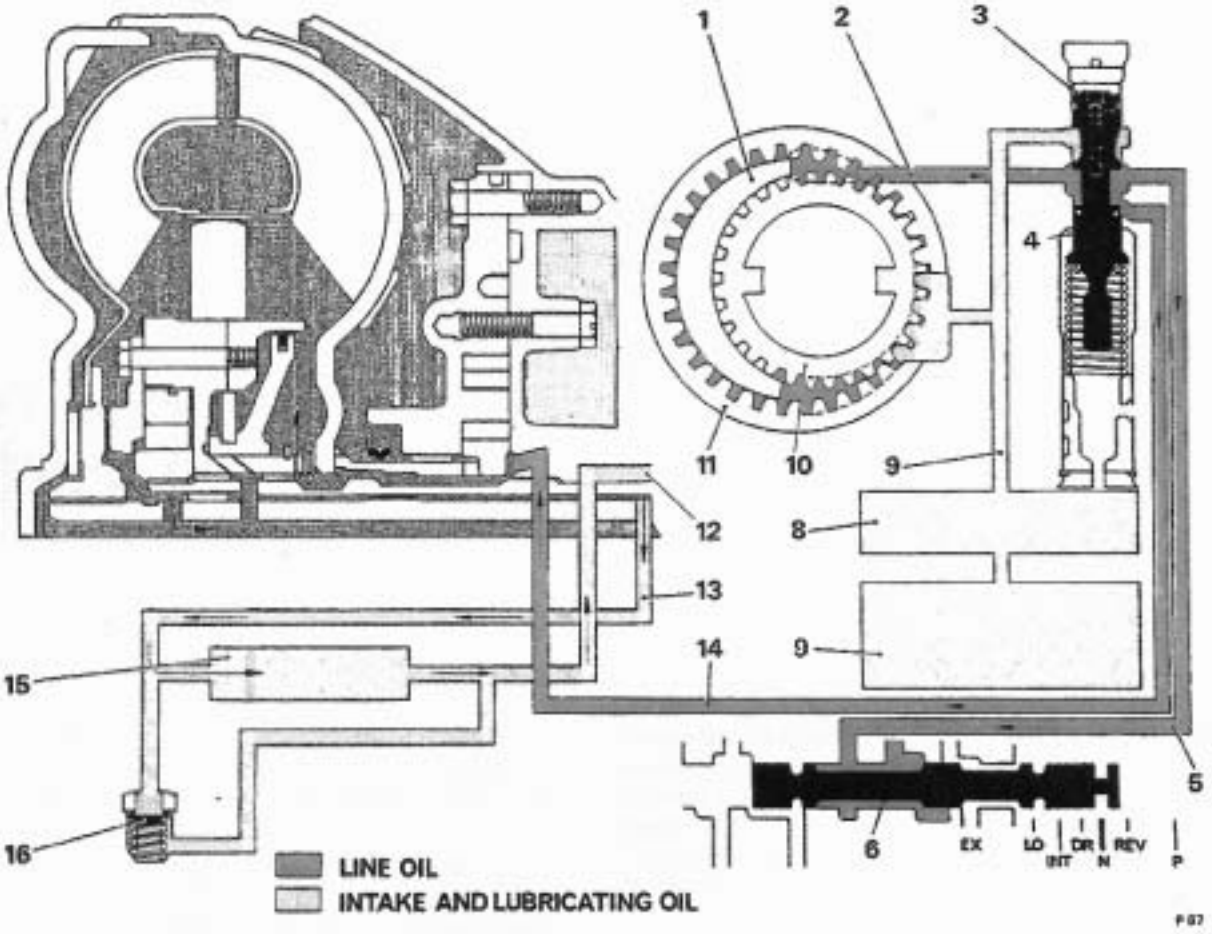

FIG. T221 OIL PUMP AND PRESSURE REGULATING SYSTEM

1 Pump crescent
2 Pump outlet
3 Line pressure oil
4 Pressure regulator valve
5 Line pressure oil
6 Manual valve
7 Transmission sump
8 Strainer assembly
9 Pump intake
10 Drive gear
11 Driven gear
12 Lubricating oil
13 Converter return
14 Converter oil
15 Heat exchanger by-pass
16 Heat exchanger

4. Remove the lead from the clips.

Note Before removing the pump, opportunity should be taken to check the front unit end play as follows.

5. Remove one of the screws securing the oil pump also the 'O' ring, at either the 10 o'clock or 5 o'clock position.

6. Fit slide hammer RH 7958 (J-6125) into the pump in the tapped hole from which the setscrew was removed.

7. Secure a dial test indicator on the slide hammer bolt, then adjust the indicator to register against the end of the turbine shaft.

8. Hold the output shaft forward whilst pushing the turbine shaft rearward to its stop.

9. Set the dial indicator to zero.

10. Pull the turbine shaft forward as shown in Figure T223.

11. Make a note of the indicator reading (shaft travel).

12. If the transmission is to be dismantled further it will enable the correct adjusting washer to be selected during assembly, thus ensuring that the front unit has the correct amount of end float. End float should be between 0·003 in. and 0·024 in. (0,076 mm. and 0,610 mm.). The selective washer which controls the end float is located between the pump cover and the forward clutch housing. If the end float is not within the limits, select a new washer, referring to the following chart.

Printed in Great Britain

September 1971

I.S.D. 2476

THICKNESS	COLOUR
0·060 in. to 0·064 in. (1,52 mm. to 1,63 mm.)	Yellow
0·071 in. to 0·075 in. (1,803 mm. to 1,905 mm.)	Blue
0·082 in. to 0·086 in. (2,08 mm. to 2,18 mm.)	Red
0·093 in. to 0·097 in. (2,36 mm. to 2,46 mm.)	Brown
0·104 in. to 0·108 in. (2,64 mm. to 2,74 mm.)	Green
0·115 in. to 0·119 in. (2,92 mm. to 3,02 mm.)	Black
0·126 in. to 0·130 in. (3,20 mm. to 3,30 mm.)	Purple

Note An oil soaked washer may tend to discolour. If necessary, measure the washer to ascertain the thickness.

13. Remove the dial indicator gauge. If oil is to be removed, do not remove the slide hammer at this stage.

14. Proceed with the removal of the oil pump as follows.

15. Remove the seven remaining setscrews securing the pump.

16. Fit slide hammer RH 7958 (J-6125), with a ⅜ in. × 16 threaded adapter, into the other threaded hole in the pump body.

17. Remove the pump from the casing by driving it outward using the slide hammers (*see Fig. T224*).

Note Operate the slide hammers simultaneously otherwise the pump will tilt and jam in the bore of the casing.

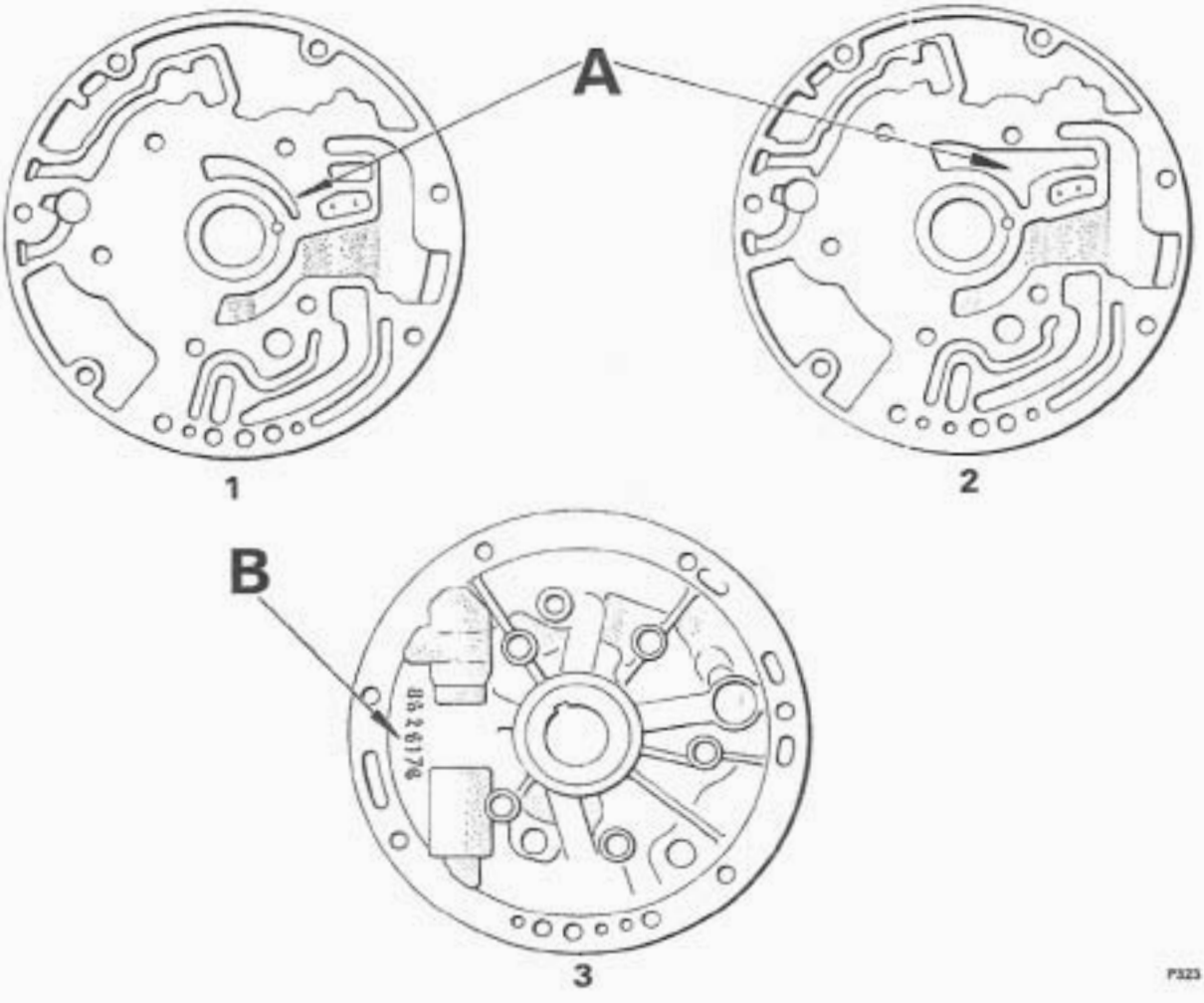

FIG. T222 PUMP COVER IDENTIFICATION

1 Oil pump cover type 1
2 Oil pump cover type 2
3 Oil pump cover type 2 (opposite side)
A Note differences in oil passages
B Identification number

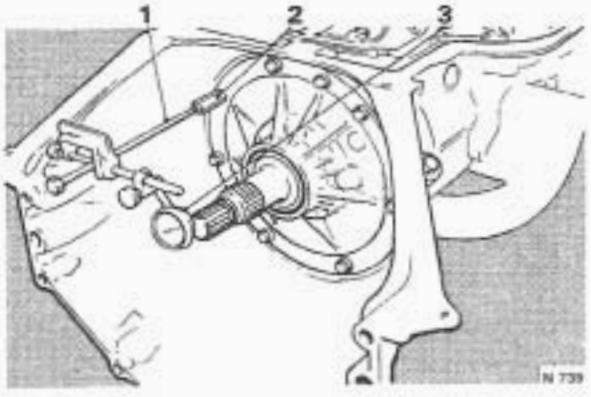

FIG. T223 CHECKING THE FRONT UNIT END FLOAT

1 RH 7958 (J 6125-1)
2 RH 7958 (J 6125-2)
3 Dial indicator (J-8001)

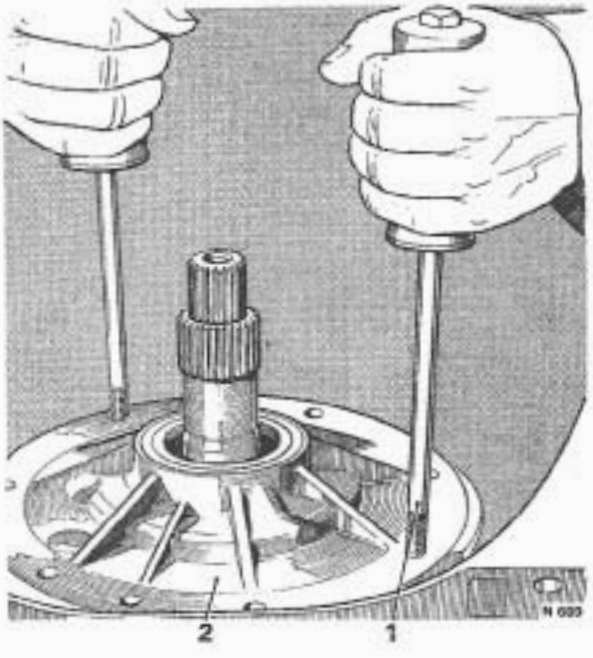

FIG. T224 REMOVING THE OIL PUMP

1 Slide hammer
2 Oil pump

18. Remove the slide hammers from the pump.
19. Remove and discard the square sectioned 'O' ring and the gasket.

Oil pump—To dismantle

1. Using adaptor RH 7960 (J-21364) in the rear unit holding fixture RH 7959 (J-6116), fit the pump into the holding fixture with the stator shaft pointing downward. Take care not to damage the shaft.
2. Remove the stator solenoid (if fitted) from the pump cover; discard the gasket.
3. Compress the regulator boost valve, against spring pressure, then remove the circlip (*see Fig. T225*).

Caution The pressure regulator spring is under extreme pressure and care should be exercised when removing the boost valve and sleeve.

4. Remove the regulator boost valve sleeve and valve.
5. Remove the pressure regulator spring.
6. Remove the regulator valve, spring retainer and spacer or spacers (if fitted).
7. Remove the five setscrews which secure the pump cover to the pump body; separate the cover and body; note that the setscrews are of differing lengths.
8. Mark the driving and driven gears to facilitate correct assembly. Do not use a scriber or a punch; an indelible pencil is recommended.
9. Remove the gears from the pump body as shown in Figure T226.
10. Remove the retaining pin and the plug from the end of the regulator bore.
11. If fitted, remove the stator valve retaining pin; remove the stator valve and spring.
12. Remove the two oil rings from the pump cover.
13. Remove the fibre adjusting washer.
14. Remove the converter return check valve from the by-pass assembly (if fitted).

Note Do not remove the heat exchanger by-pass valve unless it is necessary to renew the seat, valve or spring.

15. The sealing qualities of the by-pass valve can be checked by pouring a small quantity of thinners or spirits into the valve pocket and checking for excessive leakage.

If it is necessary to remove the heat exchanger by-pass valve seat proceed as follows.

Note On service replacement pumps the cooler by-pass valve is not used.

1. Using pump by-pass valve seat remover RH 7963 (J-21361), in conjunction with slide hammer RH 7958 (J-6125) and the ⅜ in. × 16 threaded adapter, fit the removal tool into the valve seat and drive upward on the slide hammer (*see Fig. T227*); remove and discard the valve seat.

Printed in Great Britain

September 1971

T.S.D. 2476

Note The seat may be removed also by threading the seat with a ⅜ in. × 16 tap and using the ⅜ in. × 16 adapter on the slide hammer to drive out the seat. If this method is used, flush out the bore of the by-pass valve to remove all swarf and foreign material before fitting the new seat.

2. Remove the by-pass valve and spring.

3. If the pump oil seal requires renewal, drive out the seal with a hammer and chisel.

4. Take care not to damage the pump cover, especially the seal bore diameter.

Oil pump—To inspect

Wash all parts, except the stator solenoid (if fitted), in clean paraffin (kerosene) then dry them with compressed air.

1. Examine the gear pockets and the crescent for scoring or other damage.

2. Fit the gears into the pump body then check the end clearance as shown in Figure T228. The clearance should be between 0·0008 in. and 0·0035 in. (0,020 mm. and 0,099 mm.).

3. Examine the face of the pump body for scores or burrs.

4. Examine the oil passages for blockages and porosity.

5. Examine the threads into which the cover securing setscrews fit.

6. Examine the pump body face for overall flatness.

7. Examine the bush for scores or burrs.

8. Examine the setscrew 'O' rings for damage; renew if necessary.

9. Examine the pump cover face for overall flatness.

10. Examine the stator valve bore and the pressure regulator valve bore for scores or dirt (*see Fig. T229*).

11. Ensure that all the oil passages are clear and are not interconnected due to porosity.

12. Examine for scores or damage the face against which the pump gears rotate.

13. Examine the stator shaft for damaged splines or scored bushes.

14. Examine the oil ring grooves for damage or wear.

15. Examine the heat exchanger by-pass valve for free operation and good sealing qualities.

16. Examine for damage the face against which the selective washer fits.

17. Fit the oil sealing rings into their bore in the forward clutch housing and check for slack or badly fitting rings.

18. Ensure that the pressure regulator and the boost valve will move freely in their bores.

Oil pump—To assemble

Note Before commencing with the assembly of the oil pump, always ensure that any new or replacement parts to be used are applicable to the assembly in question and are not intended for either an earlier or later assembly. **Always consult the relevant Parts Lists, Spares Information Sheets and Service Bulletins.**

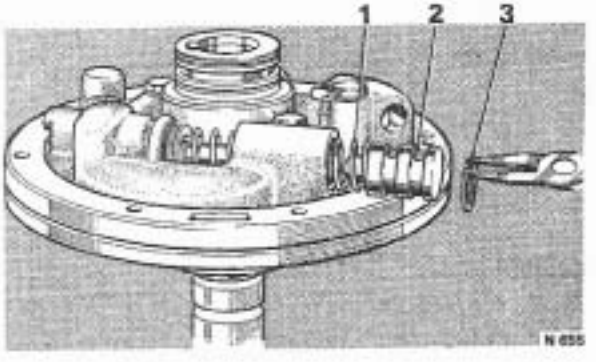

FIG. T225 REMOVING THE REGULATOR VALVE RETAINING CIRCLIP

1 Regulator valve spring
2 Boost valve sleeve
3 Circlip

1. Fit the oil pump driving and driven gears into the pump body with the alignment marks and tangs uppermost.

2. Fit the pressure regulator spring spacer or spacers, if any were removed, then fit the retainer and spring into the bore.

3. Lightly lubricate the pressure regulator valve with clean transmission fluid then fit the valve into the opposite end of the bore, stem end first.

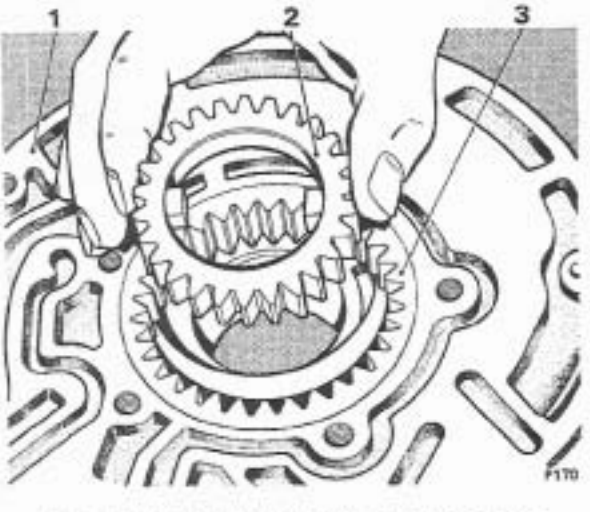

FIG. T226 REMOVING THE PUMP GEARS

1 Pump body
2 Driving gear (tangs uppermost)
3 Driven gear

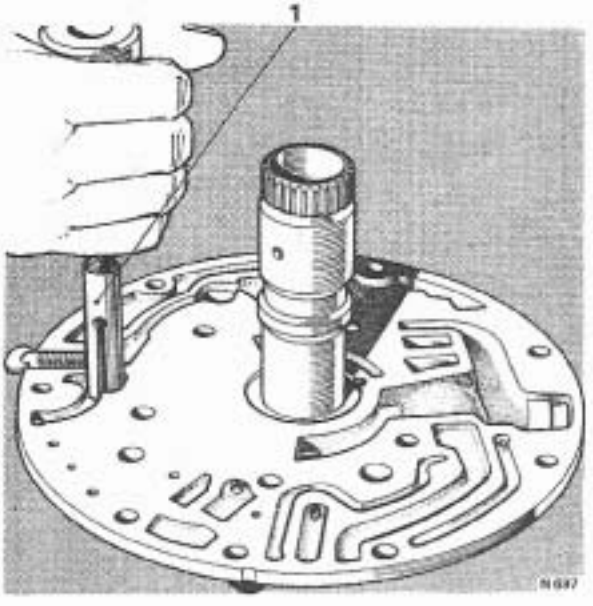

FIG. T227 REMOVING THE BY-PASS VALVE SEAT

1 By-pass valve seat extractor

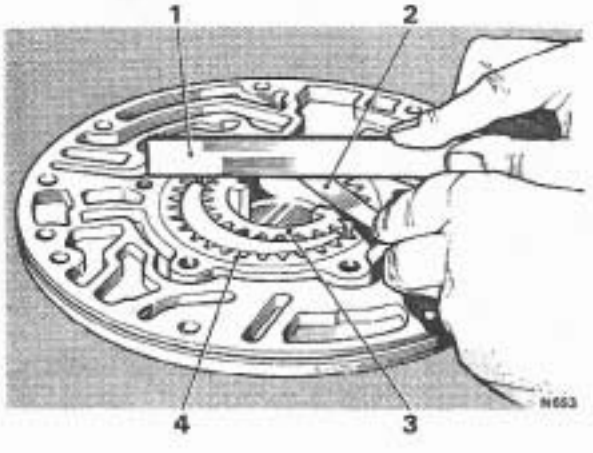

FIG. T228 CHECKING GEAR END CLEARANCE

1 Straight edge
2 Feeler gauge
3 Inner (driving gear)
4 Outer (driven gear)

4. Lightly lubricate the boost valve and sleeve then fit the valve into the sleeve with the stem of the valve outermost. Fit both parts into the bore in the pump cover by compressing the sleeve against the pressure regulator valve spring.

5. Retain the sleeve with the circlip.

6. Fit the pressure regulator valve end plug and retaining pin into the opposite end of the bore.

7. Lightly lubricate the stator valve then fit the valve and spring into the bore in the pump cover; fit the retaining pin.

8. Fit the previously selected front unit adjustable thrust washer (fibre) over the pump cover delivery sleeve.

Note The correct washer size should have been determined at the time of the front unit end float check as described under 'Oil pump — To remove'.

9. Fit the oil rings.

10. If previously removed, fit the heat exchanger by-pass valve spring (large end first), valve and valve seat; lightly lubricate the valve. Use the pump by-pass valve fitting tool RH 7964 (J-21360) to fit the valve seat (*see Fig. T230*).

11. Fit the converter by-pass valve into the by-pass valve assembly.

12. Fit the pump body into the rear unit holding fixture RH 7959 (J-6116), with the stator shaft pointing downward. Take care not to scratch or damage the shaft.

13. Lubricate the pump gears with clean transmission fluid then fit the pump cover to the pump body.

14. Fit the cover securing setscrews in their original positions with the clip adjacent to the stator valve. Leave the screws one turn slack.

15. Fit the pump body and cover alignment band J-21368 around the pump assembly. Tighten the wing nut on the band to align the cover with the body (*see Fig. T231*).

16. With the band in position, tighten the body-to-cover securing setscrews to 18 lb. ft. (2,49 kg. m.). Remove the band.

17. Fit a new square sectioned 'O' ring to the pump.

18. If necessary, fit a new pump oil seal using seal installing tool RH 7953 (J-21359).

19. Fit the stator solenoid (if fitted). Tighten the securing setscrews to 12 lb. ft. (1,66 kg. m.).

20. Fit the stator wire to the clip.

Oil Pump—To fit

1. Fit a new gasket to the oil pump, retaining it with petroleum jelly.

2. Align the holes in the gasket with the corresponding holes in the pump cover.

Printed in Great Britain

September 1971

T.S.D. 2476

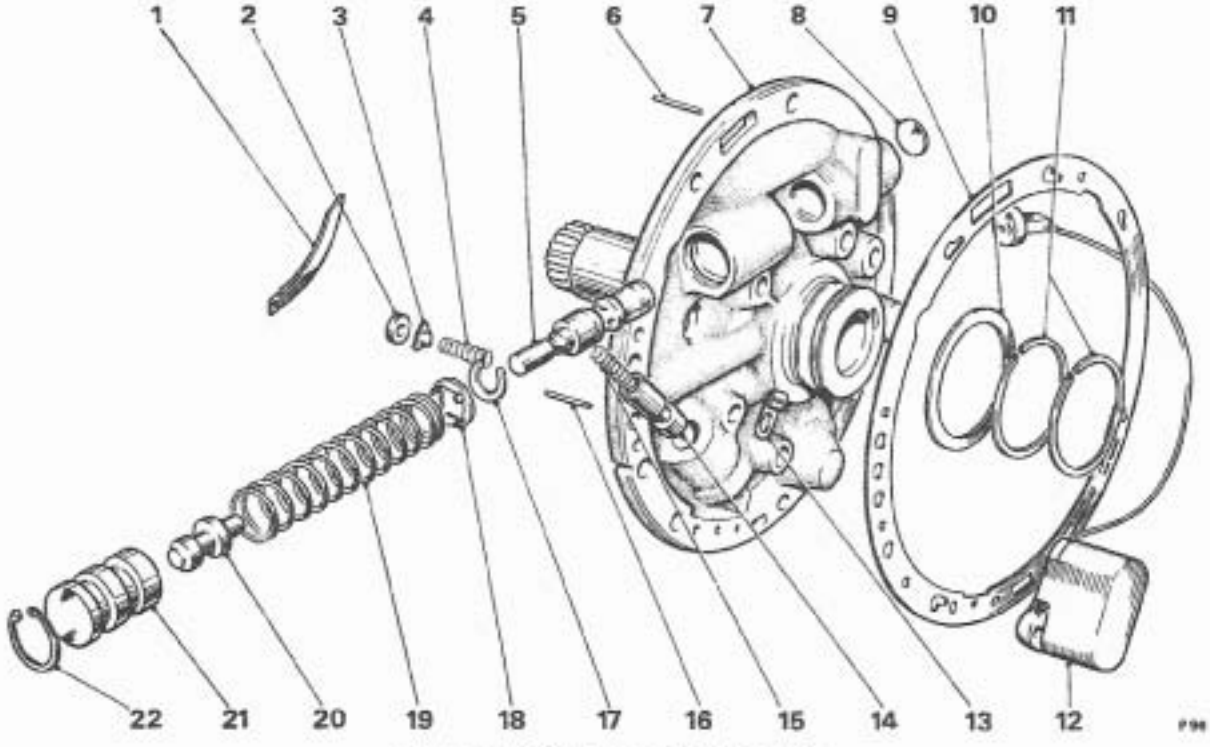

FIG. T229 PUMP COVER—EXPLODED

1 Converter out — check valve (early cars)
2 Heat exchanger by-pass valve seat
3 Heat exchanger by-pass valve
4 Heat exchanger by-pass valve spring
5 Pressure regulator valve
6 Retaining pin
7 Pump cover
8 Bore plug
9 Gasket
10 Selective washer
11 Oil sealing rings
12 Stator solenoid (early cars)
13 Wire retaining clip (early cars)
14 Stator valve (early cars)
15 Stator valve spring (early cars)
16 Retaining pin
17 Spacer
18 Spring retainer
19 Spring-pressure regulator
20 Boost valve
21 Sleeve
22 Snap ring

3. Lubricate the turbine shaft journals with clean transmission fluid. Lubricate the hooked oil seal rings on the pump delivery sleeve with petroleum jelly; ensure that the ends of the rings are interlocked.

4. Fit two $\frac{3}{16}$ in. × 18 slide hammer bolts RH 7958 (J-6125), through two opposite threaded holes in the pump assembly. The bolts will serve as guide pins when the pump is being fitted to the casing.

5. Position the pump assembly in the transmission casing, then screw the two threaded guide bolts into the corresponding holes in the transmission casing.

6. Feed the stator connector and lead (if fitted) through the hole in the casing adjacent to the pressure regulator (*see Fig. T232*).

7. Fit the pump assembly into the transmission casing.

8. Fit new 'O' rings to the pump securing setscrews then fit the setscrews. Do not remove the guide bolts until all but two of the setscrews have been fitted.

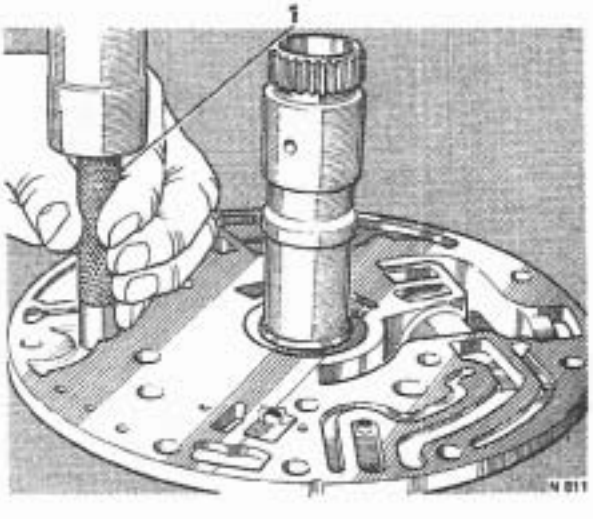

FIG. T230 FITTING THE BY-PASS VALVE SEAT
1 Punch

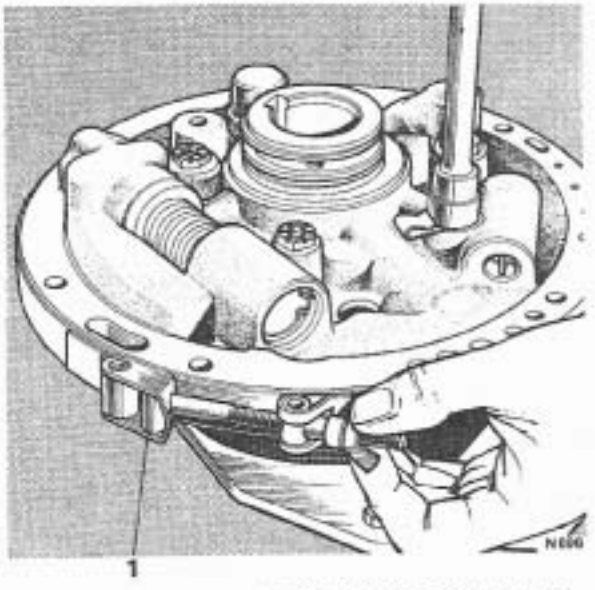

FIG. T231 ALIGNING THE PUMP COVER WITH PUMP BODY

1 Alignment band

9. Remove the guide bolts, but leave out one securing screw at either the 5 o'clock or 10 o'clock position so that the front unit end float can be rechecked. Torque tighten the setscrews to 18 lb. ft. (2,49 kg. m.).

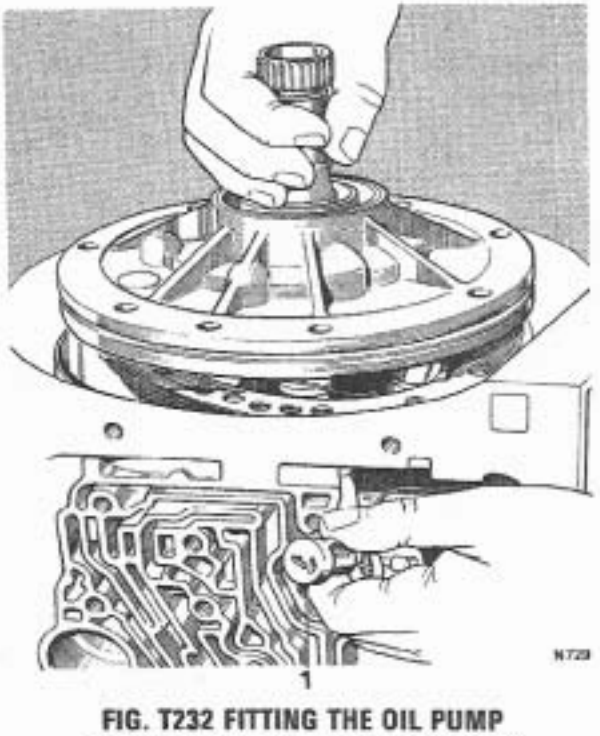

FIG. T232 FITTING THE OIL PUMP

1 Stator solenoid connector (if fitted)

Note If the turbine shaft cannot be rotated as the the pump is being pulled into position, it is possible that either the forward or direct clutch housings have not been correctly indexed with all the clutch plates. This condition should be corrected before the pump is finally pulled into position.

10. Recheck the front unit end float as described earlier in this Section.

11. Fit the remaining setscrew using a new 'O' ring; torque tighten the setscrew to 18 lb. ft. (2,49 kg. m.).

12. Fit the remainder of the units (*see Section T14*).

Printed in Great Britain
September 1971
T.S.D. 2476

Section T20
CONTROL RODS, LEVERS and PARKING LINKAGE

The control rods, levers and parking linkage consist of an assembly of levers and rods which are operated by the electric gearchange actuator; some are fitted to the transmission interior and some externally. The inside detent lever is connected to the manual control valve in the control valve unit and is retained in the desired position by a spring-loaded detent roller.

The parking brake actuating rod causes the parking pawl to engage the transmission whenever Park is selected. This provides a mechanical lock which will hold the car on the steepest of gradients.

On **early cars** an emergency 'Get-You-Home' lever is pivoted on a pin secured to a bracket on the 'controls' side of the transmission. The lever is connected to the gearchange operating lever, and in the event of gear change actuator failure, will enable the driver to manually select the desired Range.

When the gear selector lever on the steering column is moved and the ignition is switched on, the electric actuator will move the gearchange operating lever to the required position via an adjustable rod. The gearchange operating lever is secured to the outer end of the manual shaft and the inside detent lever is secured to the inner end of the shaft, thus the inside detent lever will move a corresponding distance, moving the manual control valve. By this means it is possible for the driver to position the manual valve to give him the gear range he desires.

When the lever on the steering column is moved to Park, a rod which is secured to the inside detent lever causes the parking pawl to engage with a gear ring on the rear unit planet carrier. The rear unit planet carrier is mechanically connected to the transmission output shaft, thus the shaft is prevented from rotating.

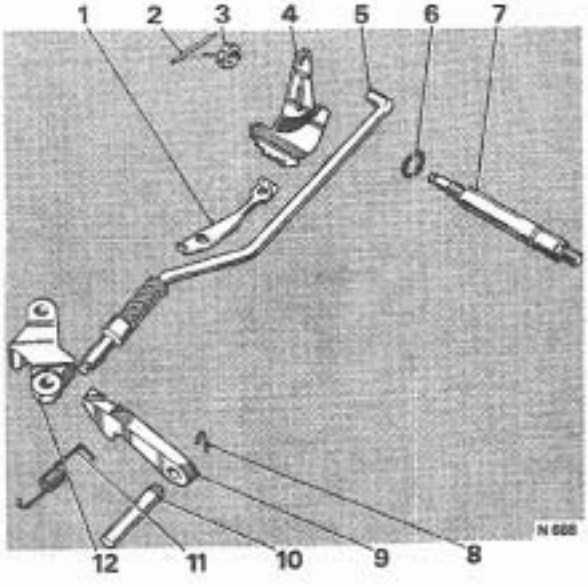

FIG. T233 MANUAL AND PARKING LINKAGE—EXPLODED

1 Detent roller and spring
2 Retaining pin
3 Lock nut
5 Inside detent lever
4 Parking brake actuating rod
6 Manual shaft seal
7 Manual shaft
8 Spring retainer
9 Parking pawl
10 Parking pawl shaft
11 Pawl return spring
12 Parking brake bracket

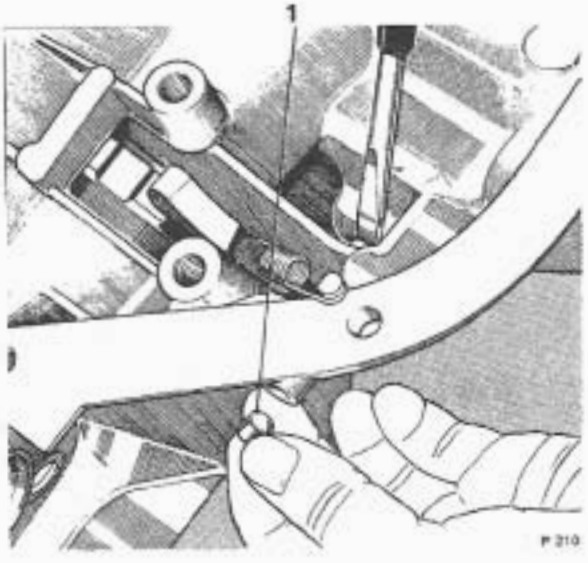

FIG. T234 REMOVING CUP PLUG

1 Cup plug

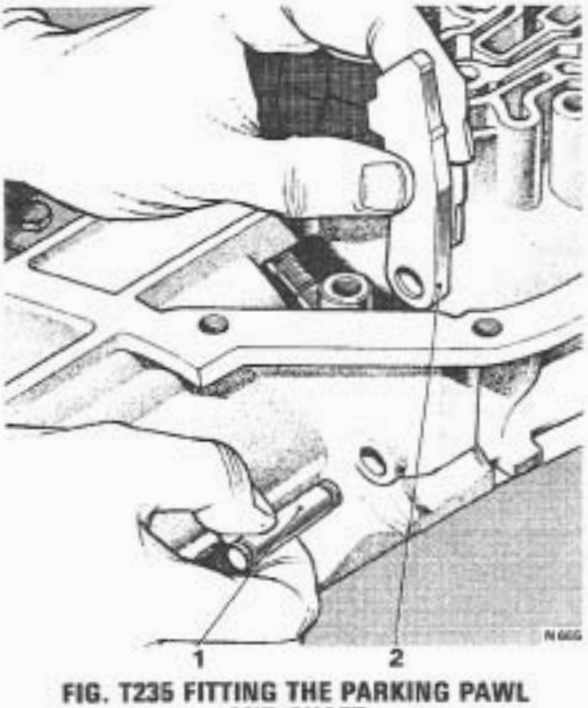

FIG. T235 FITTING THE PARKING PAWL AND SHAFT

1 Shaft
2 Parking pawl

Control rods, levers and parking linkage—To remove

1. The units may be removed from the transmission whether or not the transmission has been removed from the car.
2. If the transmission has not been removed, drain and remove the sump as described in Section T14.
3. If the gearchange electric actuator and the neutral start and height control switches have not been removed, disconnect the gearchange operating rod and the switch operating rod by removing the split pins and clevis pins from the levers at each end; remove the rods.
4. Remove the split pin and clevis pin which secures the link rod to the transmission operating lever.
5. Remove the nut and clamping washer which retains the transmission operating lever to its pivot pin; remove the lever.
6. Remove the lock-nut which retains the gearchange operating lever to the manual shaft; remove the lever.
7. On some early units a shield may be fitted to exclude moisture and dirt from between the shaft and shaft bore in the case; remove the shield from the shaft.
8. Remove the setscrew which secures the detent spring and roller assembly to the control valve unit; remove the detent spring assembly. Refer to Figure T233 for an exploded view of the internal parts.
9. Remove the pin which secures the manual shaft to the case.
10. Slacken the lock-nut which secures the inside detent lever to the manual shaft.
11. Prise the inside detent lever from the manual shaft then remove the lock-nut.
12. Remove the parking brake actuating rod, detent lever and manual shaft from the case.

Note Do not remove manual shaft seal unless replacement is required.

13. Remove the setscrews securing the parking brake bracket; remove the bracket.
14. Remove the parking pawl return spring.

Note The following operations are to be completed only if one or more of the parts involved requires replacement.

15. Remove the spring retainer from the parking pawl shaft. Remove the parking brake pawl shaft cup plug by placing screwdriver between parking pawl shaft and case rib and prying outward (*see Fig. T234*).
16. Remove the parking pawl and the shaft.

Printed in Great Britain

September 1971

T.S.D. 2476

Control rods, levers and parking linkage—To inspect

1. Wash all parts in clean paraffin (kerosene) then dry them with compressed air.
2. Examine the gearchange operating rod for signs of bending.
3. Examine the jaws for cracks or damage.
4. Examine the link rod for signs of bending.
5. Examine the switch actuating rod for cracks or signs of bending.
6. Examine the 'Get-You-Home' lever (if fitted), gearchange operating lever and the gearchange actuator lever for damage and wear in the clevis pin bores.
7. Examine the Oilite bushes in the 'Get-You-Home' lever (if fitted) for excessive wear.
8. Ensure that the pin is securely riveted in the gearchange operating lever.
9. Examine the parking actuator rod for cracks, damaged snap ring groove or broken spring retaining lugs.
10. Examine the actuator spring for distortion or damage. Ensure that the actuator fits freely on the actuator rod.
11. Examine the parking pawl for cracks or excessive wear.
12. Examine the manual shaft for damaged threads or shaft roughness at the gearchange operating lever end.
13. Examine the inside detent lever for cracks or a loose pin.
14. Examine the parking pawl shaft for damaged oil seal or retaining clip grooves.
15. Examine the parking pawl return spring for distortion or damaged ends.
16. Examine the parking pawl bracket for cracks or excessive wear.
17. Examine the detent spring and roller assembly for cracks or damage.

Control rods, levers and parking linkage—To fit

1. Fit the parking pawl with the tooth toward the centre of the transmission then fit the parking pawl shaft (*see Fig. T235*).
2. Fit the parking pawl shaft retaining clip.
3. Fit the parking pawl return spring with the squared end hooked around the pawl.
4. Fit the parking pawl bracket so that the ends fit one each side of the pawl (*see Fig. T236*). Fit the securing setscrews and torque tighten them to 18 lb. ft. (2,49 kg. m.).
5. Fit the actuator rod into the inside detent lever from the side opposite to the pin.

FIG. T236 FITTING THE PARKING PAWL BRACKET

1 Parking pawl bracket
2 Parking brake pawl

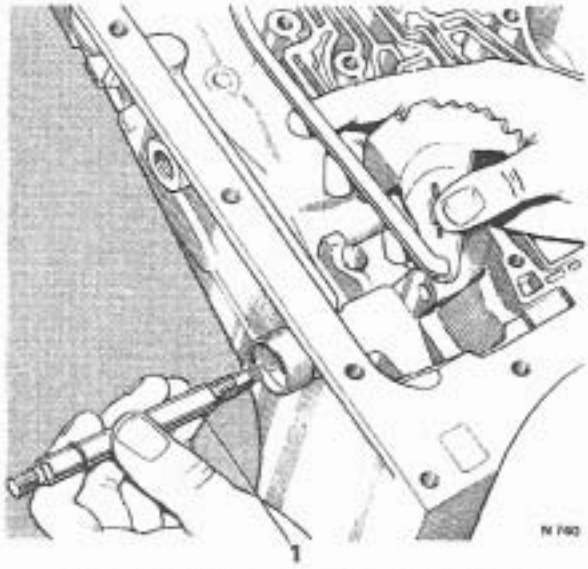

FIG. T237 FITTING THE MANUAL SHAFT

1 Manual shaft

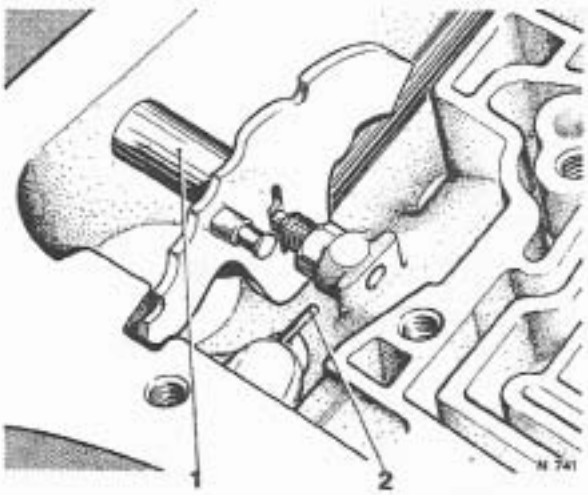

FIG. T238 FITTING THE MANUAL SHAFT RETAINING PIN

1 Manual shaft
2 Retaining pin

6. Fit the actuating rod plunger under the parking brake bracket and over the parking pawl.

7. Lubricate the manual shaft around the area occupied by the 'O' ring with Shell Retinax A grease. Fit the shaft into the case and through the detent lever (*see Fig. T237*).

8. Fit the lock-nut onto the manual shaft then torque tighten the nut (*see Chapter P*).

9. Fit the retaining pin into the transmission casing, aligning it with the groove in the manual shaft (*see Fig. T238*).

10. Fit the detent spring and roller. Torque tighten the retaining setscrew to 8 lb. ft. (1,11 kg. m.).

11. If a shield was removed, apply Shell Retinax A grease to the inside of the shield then fit the shield over the shaft.

12. Fit the gearchange operating lever to the manual shaft with the cranked side lowermost and away from the transmission. Fit the lock-nut and tighten it to 18 lb. ft. (2,49 kg. m.) (*see Chapter P*).

13. Fit the transmission operating lever. Fit the clamping washer and nut; torque tighten the nut to between 8 lb. ft. and 10 lb. ft. (1,11 kg. m. and 1,39 kg. m.).

14. Fit the gearchange operating rod, the switch operating rod and the link rod. Lubricate the clevis pins with Molytone 265 grease then fit new split pins.

15. If the length of either the gearchange operating rod or the switch operating rod has been altered, adjust them as described in Section T5.

16. Fit the sump (*see Section T14*).

Section T21
TURBINE SHAFT, FORWARD and DIRECT CLUTCHES, SUN GEAR SHAFT and FRONT BAND

The turbine shaft is a splined shaft which connects the torque converter to the forward clutch.

The forward clutch comprises a housing, splined onto the turbine shaft, steel clutch driving plates which are driven by the clutch housing, composition faced plates which are splined onto a clutch hub and a hydraulically operated clutch piston. The mainshaft is splined into the forward clutch hub.

The direct clutch is similar in construction to the forward clutch (*see Fig. T239*).

The composition plates are splined to a hub which is integral with the forward clutch back plate. The steel plates are splined to a housing which in turn is splined to the sun gear shaft. The clutch is applied hydraulically by a piston housed in the direct clutch drum.

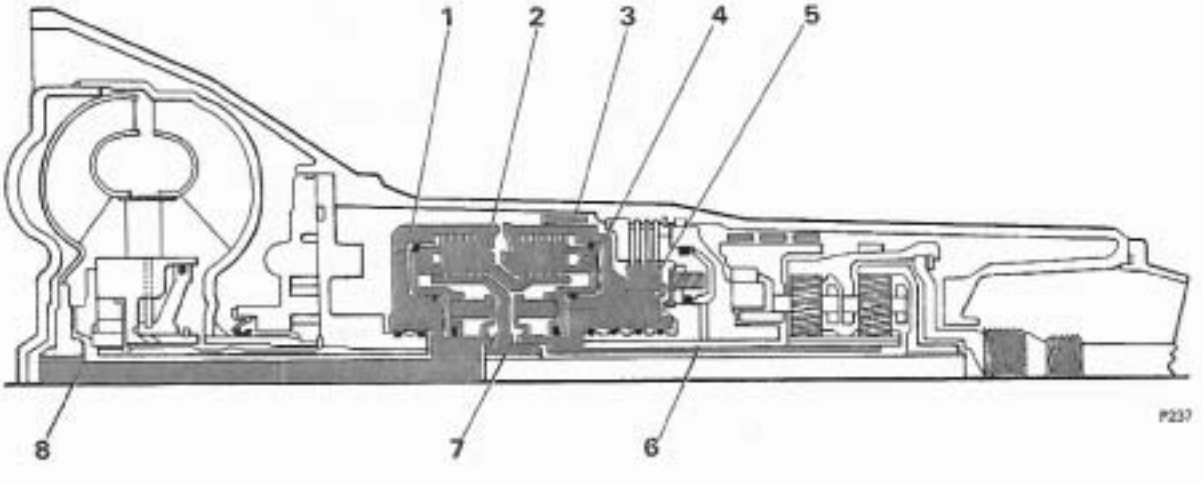

FIG. T239 SECTIONED VIEW OF TRANSMISSION SHOWING FORWARD AND DIRECT CLUTCHES

1 Forward clutch drum
2 Direct clutch hub
3 Second over-run (front) band
4 Direct clutch drum
5 Intermediate roller
6 Sun gear shaft
7 Forward clutch hub
8 Turbine shaft

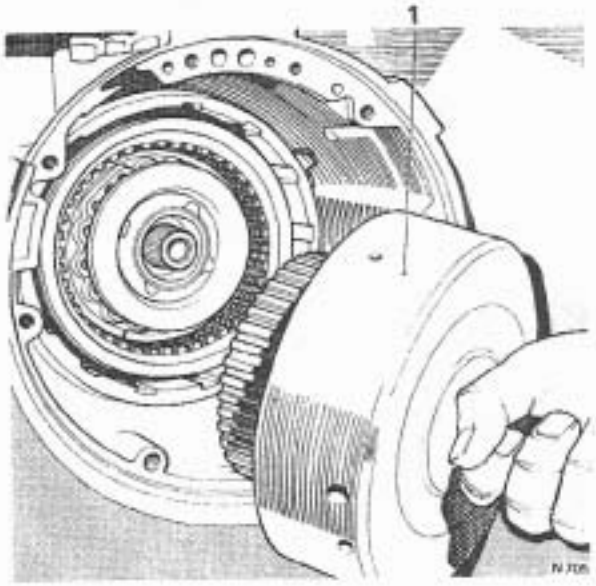

FIG. T240 REMOVING THE FORWARD CLUTCH ASSEMBLY

1 Forward clutch assembly

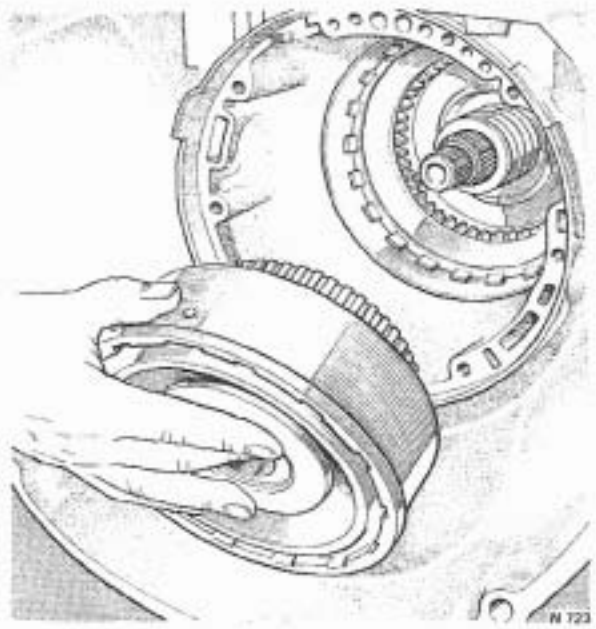

FIG. T241 REMOVING THE DIRECT CLUTCH AND INTERMEDIATE SPRAG ASSEMBLY

The front band is a lined steel band which is anchored to the transmission case at one end and is servo operated at the other end. The band fits around the direct clutch drum, and when moved by the servo, holds the drum stationary.

Whenever the forward clutch is applied, the drive transmitted by the turbine is connected to the transmission mainshaft. When the forward clutch is released the clutch return springs push back the hydraulic piston, the plates are released and the connection between the converter and the mainshaft is broken. As a result, the transmission is in Neutral.

Whenever the direct clutch is applied, drive from the forward clutch is divided and follows two different paths to the gear unit (*see Section T22*).

By following one path, the drive continues through the forward clutch to the mainshaft and the rear gear unit internal (annulus) gear. The other path is via the forward clutch back plate, through the direct clutch to the sun gear shaft.

As the direct clutch is applied, clockwise torque from the converter causes an intermediate inner roller race to overrun the roller clutch assembly.

An illustrated summary of the power flow through the transmission is given in Section T22.

Turbine shaft, forward and direct clutches, sun gear shaft and front band—To remove

1. Remove the transmission from the car. Withdraw the converter assembly.
2. Remove the oil pump.
3. Withdraw the turbine shaft and the forward clutch from the transmission (*see Fig. T240*).
4. Remove the thrust washer from between the forward clutch hub and the direct clutch housing; the washer may have come out with the forward clutch.
5. Withdraw the direct clutch and intermediate roller assembly (*see Fig. T241*). The sun gear shaft may come out with the direct clutch assembly.
6. Remove the sun gear shaft if not previously removed.
7. Remove the front band.

Note The opportunity should be taken at this time to check the end float of the rear unit; proceed as follows.

Rear unit end float—To check

1. Remove the transmission rear extension housing.
2. Fit speedometer gear extractor bolt J-21797, or a similar suitable bolt into one of the holes in the end of the transmission case.
3. Mount a dial test indicator onto the bolt so that the indicator stem registers with the end of the output shaft (*see Fig. T242*).

Printed in Great Britain
September 1971
T.S.D. 2476

4. Set the dial indicator to zero.

5. Move the output shaft to and fro, noting the indicator reading to enable the correct end float adjusting washer to be used when the transmission is assembled. The end float should be between 0·007 in. and 0·019 in. (0,178 mm. and 0,483 mm.).

6. The adjusting washer which controls this end float is the steel washer with the three tabs, located between the thrust washer and the rear face of the transmission case. The notches on the tabs serve to identify washer thickness.

7. If a different washer thickness is required to bring end float within the specified limits, it can be selected with the aid of the following chart.

THICKNESS		IDENTIFICATION NOTCH AND/OR NUMERAL	
0·074 in. (1,880 mm.	to 0·078 in. to 1,981 mm.)	None	1
0·082 in. (2,083 mm.	to 0·086 in. to 2,184 mm.)	On side of 1 tab	2
0·090 in. (2,286 mm.	to 0·094 in. to 2,388 mm.)	On side of 2 tabs	3
0·098 in. (2,489 mm.	to 0·102 in. to 2,591 mm.)	On end of 1 tab	4
0·106 in. (2,692 mm.	to 0·110 in. to 2,794 mm.)	On end of 2 tabs	5
0·114 in. (2,896 mm.	to 0·118 in. to 2,997 mm.)	On end of 3 tabs	6

Forward clutch and turbine shaft—To dismantle

1. With adaptor RH 7960 (J-21364) in the rear unit holding fixture RH 7959 (J-6116), fit the forward clutch assembly into the holding fixture with the turbine shaft lowermost; take care not to damage the shaft.

2. Remove the large snap ring which retains the direct clutch hub to the forward clutch drum. Remove the direct clutch hub.

3. Remove the forward clutch hub. Remove the thrust washers, one from each side of the hub. An exploded view of the forward clutch is given in Figure T243.

4. Remove five composition and five steel clutch plates.

5. Place the forward clutch on the bed of a press with turbine shaft lowermost.

6. Using clutch spring compressor RH 7965 (J-4670) in conjunction with adaptor RH 7966 (J-21664), compress the clutch return springs until the retaining snap ring is accessible. Remove the snap ring (*see Fig. T244*).

7. Remove the tools then remove the spring retainer and the sixteen clutch release springs.

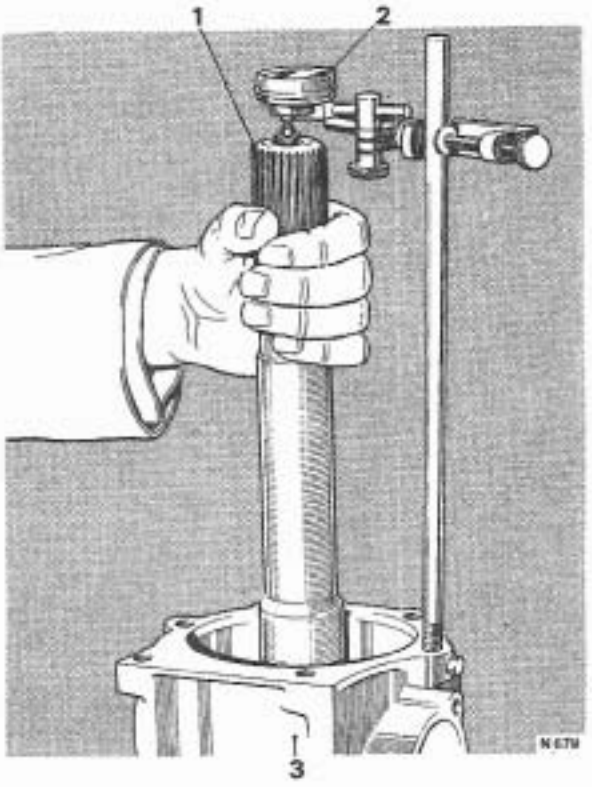

FIG. T242 CHECKING REAR UNIT END FLOAT

1 Output shaft
2 Dial indicator gauge
3 Transmission case

8. Remove the piston from the clutch drum (*see Fig. T245*).

9. Remove and discard the inner and outer seals from the clutch piston.

10. Remove and discard the piston centre seal from the forward clutch drum.

11. It is not necessary to remove the turbine shaft from the forward clutch drum unless either the shaft or the drum is damaged and requires renewal. In such a case proceed as follows.

12. Place the forward clutch drum on the bed of a press with the turbine shaft lowermost.

13. Using a 0·375 in. (9,525 mm.) drive extension approximately 3·00 in. (7,62 cm.) long, or similar tool as a drive, press the turbine shaft out of the forward clutch housing.

Forward clutch and turbine shaft—To inspect

1. Wash all parts except the composition clutch plates in clean paraffin (kerosene) then dry them with compressed air.

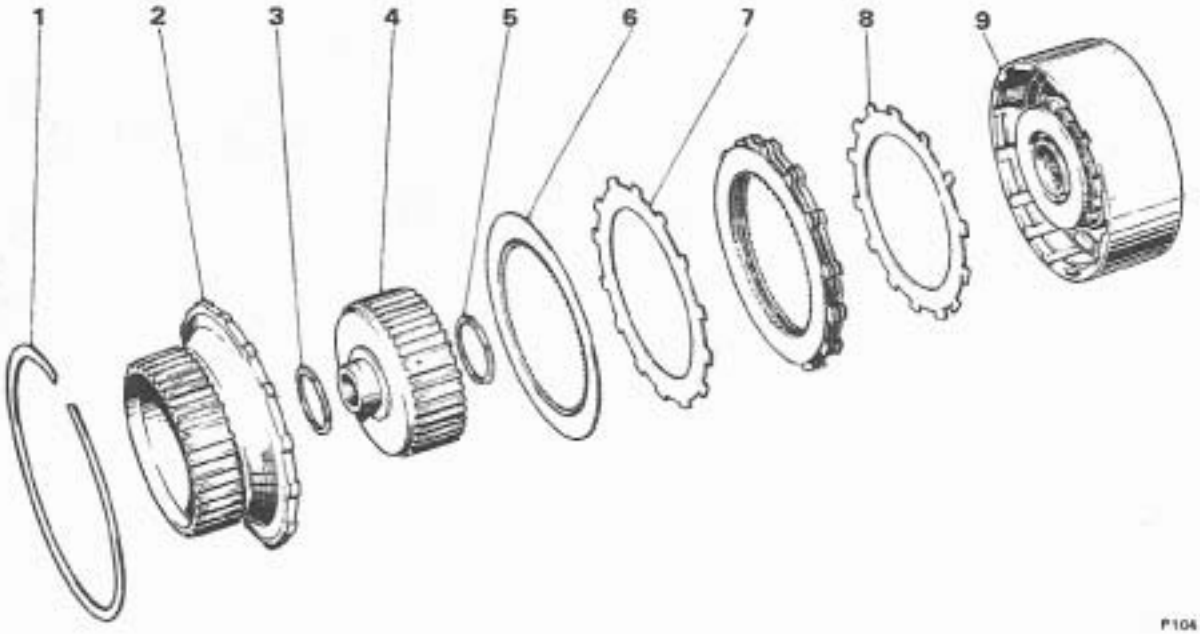

FIG. T243 FORWARD CLUTCH WITH FORWARD AND DIRECT CLUTCH HUBS—EXPLODED

1 Snap ring
2 Direct clutch hub
3 Thrust washer
4 Forward clutch hub
5 Thrust washer
6 Composition plate
7 Flat steel plate
8 Waved steel plate
9 Forward clutch assembly

2. Examine the driving and driven clutch plates for signs of burning, scoring or wear. If the driven (composition) plates are black in colour or have a glazed appearance they should be renewed. The steel driving plates should have a matt grey finish, but if they are discoloured or warped it is a sign of overheating and the plates must be renewed.

3. Examine the sixteen clutch release springs for collapsed coils or signs of distortion. If more than one spring shows these symptoms, the sixteen springs must be renewed.

4. Examine the clutch hubs for worn splines. Ensure that the lubrication holes are clear and that the thrust faces are not scored or damaged.

5. Examine the piston for cracks.

6. Examine the clutch drum for wear, scoring and cracks.

7. Ensure that the oil passages are clear.

8. Ensure that the check ball in the clutch drum is free in its chamber.

9. Ensure that the lubrication holes in the turbine shaft are clear.

10. Examine the splines on the turbine shaft for damage and the shaft for cracks or distortion.

11. Examine the bush journals for damage.

Forward clutch and turbine shaft—To assemble

If the turbine shaft was removed from the forward clutch drum, proceed as follows.

1. Place the clutch drum on the bed of a press with the front face (flat side) uppermost.

2. Lightly lubricate the shorter splined end of the turbine shaft then, align the splines with the mating splines in the forward clutch housing. Using the press, carefully press the turbine shaft into the forward clutch drum until the shaft bottoms on the hub of the drum.

Caution The shaft should be started in the drum, then the pressure on the press arbor relaxed to allow the shaft to straighten itself. Repeat this step several times until it is evident that the shaft is squarely aligned with the drum. If the shaft is not started squarely, damage to the shaft or drum splines may occur.

3. Invert the forward clutch drum on the press so that the turbine shaft is downward.

4. Lubricate new inner and outer clutch piston seals with clean transmission fluid. Lubricate the seal grooves in the piston with petroleum jelly then fit the

Printed in Great Britain
September 1971
T.S.D. 2476

seals with the seal lip facing away from the return spring pockets.

Note The forward and direct clutch pistons have identical inside and outside diameters, therefore, ensure that the correct piston is installed in the clutch assemblies.

5. Lubricate a new piston centre seal with clean transmission fluid. Lubricate the seal groove in the forward clutch housing with petroleum jelly then fit the seal with the lip uppermost.

6. Fit the forward and direct clutch inner seal protector RH 7968 (J-21362) over the forward clutch hub.

7. Fit the clutch piston inside the forward and direct clutch piston installing tool RH 7949 (J-21409) then fit the assembly into the forward clutch housing (*see Fig. T246*).

8. Fit the clutch piston by rotating it clockwise until it is seated in the drum.

9. Fit the sixteen clutch release springs into the spring pockets in the clutch piston.

10. Place the clutch drum on the bed of a press with the turbine shaft lowermost.

11. Position the spring retainer on the springs.

12. Using clutch spring compressor RH 7965 (J-4670) in conjunction with adapter RH 7966 (J-21664), compress the springs ensuring that the retainer does not catch in the snap ring groove. Fit the snap ring then release the tension on the springs. Remove the tools.

Caution Ensure that the clutch release springs are not leaning. If necessary, push the springs into an upright position using a small screwdriver.

13. Remove the forward clutch from the press then fit it to the holding fixture RH 7959 (J-6116) with the turbine shaft lowermost; take care not to damage the shaft.

14. Fit the thrust washer onto the outside of the forward clutch hub. Retain the washers in position with petroleum jelly. The bronze washer is fitted to the side of the hub which faces the forward clutch housing.

15. Fit the forward clutch hub to the forward clutch housing.

16. Lubricate with clean transmission fluid the four flat steel clutch plates, the five composition faced plates and the one waved (notched) steel clutch plate.

17. Fit the clutch plate in the forward clutch housing. Commence with the waved steel plate and fit alternate steel and composition plates, finishing with a composition plate.

18. Fit the direct clutch hub into the forward clutch drum; fit the snap ring.

19. Fit the forward clutch assembly onto the oil pump delivery sleeve then check clutch operation by

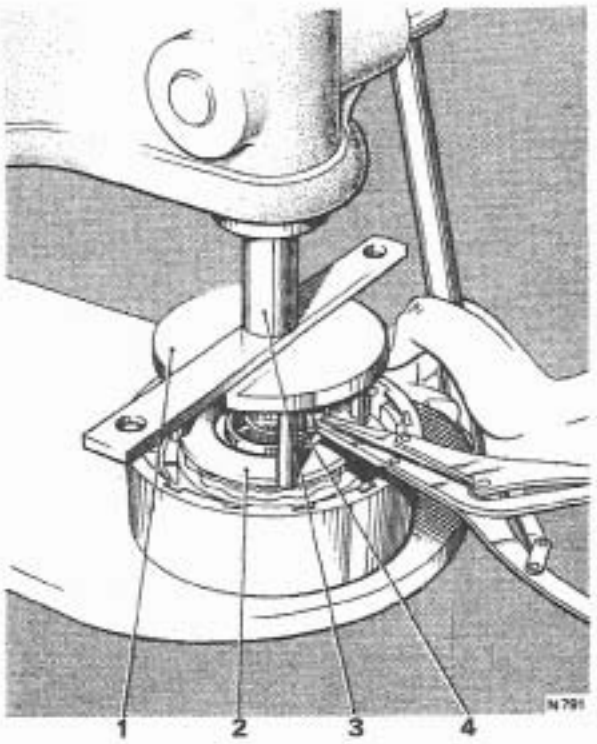

FIG. T244 REMOVING AND FITTING THE FORWARD CLUTCH HOUSING SNAP RING

1 Clutch spring compressor
2 Adapter
3 Press ram
4 Snap ring

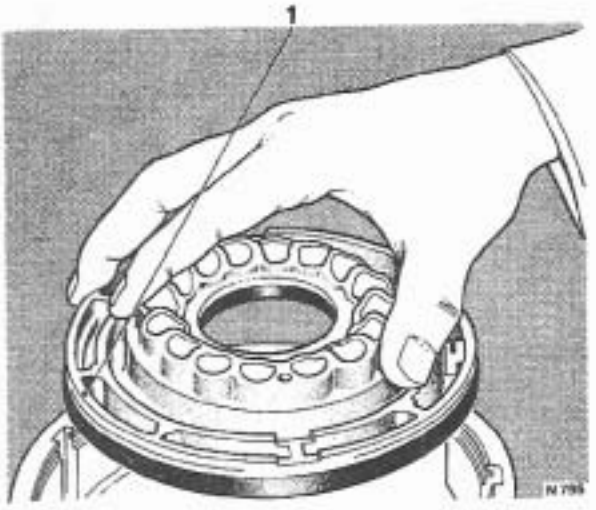

FIG. T245 REMOVING THE FORWARD CLUTCH PISTON

1 Clutch piston

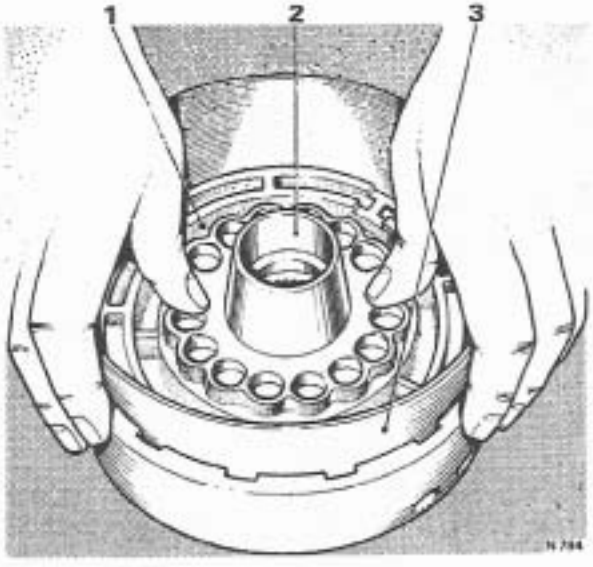

FIG. T246 FITTING THE FORWARD CLUTCH PISTON

1 Forward clutch piston
2 Seal protector
3 Piston fitting tool

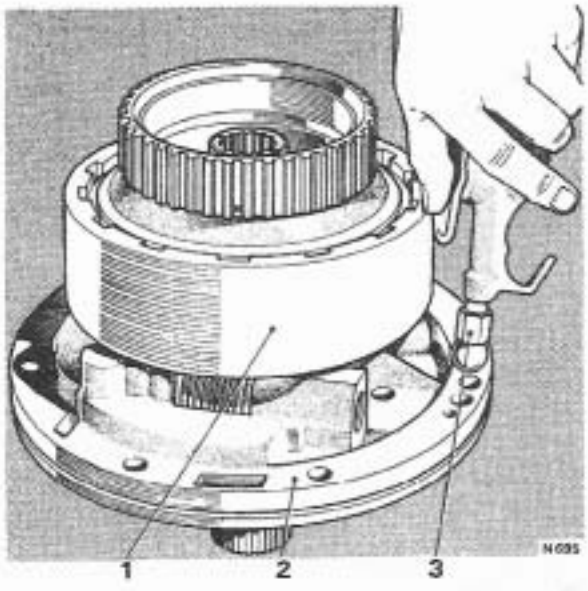

FIG. T247 AIR TESTING THE FORWARD CLUTCH

1 Forward clutch assembly
2 Oil pump
3 Air line nozzle

applying air pressure at approximately 70 lb/sq. in. (4,92 kg/sq.cm.) through the forward clutch apply passage in the pump (*see Fig. T247*). The clutch should be heard and felt to apply.

Direct clutch and intermediate roller assembly—To dismantle

1. Remove the snap ring which retains the roller retainer.
2. Remove the retainer (*see exploded view in Figure T248*).
3. Remove the roller outer race and bushes then withdraw the roller clutch assembly from the outer race.
4. Turn the unit over then remove the large snap ring which retains the direct clutch back plate in the clutch housing; remove the back plate.
5. Remove the five composition plates and the five steel plates (*see exploded view of direct clutch in Figure T249*).
6. Using clutch spring compressor RH 7965 (J-4670) in conjunction with rear clutch spring compressor RH 7967 (J-6129) and adapter RH 7966 (J-21664), compress the clutch return springs and remove the snap ring (*see Fig. T250*).
7. Remove the tools then lift off the spring retainer and remove the sixteen clutch release springs.
8. Withdraw the direct clutch piston from the clutch drum.
9. Remove and discard the piston inner and outer seals.
10. Remove and discard the piston centre seal from the direct clutch drum.

Direct clutch, sun gear shaft intermediate roller assembly—To inspect

1. Wash all parts, except the composition faced clutch plates, in clean paraffin (kerosene) then dry them with compressed air.
2. Examine the roller assembly for loose rollers.
3. Examine the roller bushes for wear or distortion.
4. Examine the inner and outer races for scratches or wear.
5. Examine the clutch drum for cracks, ensure that the oilways are clear and look for excessive wear on the clutch plate driving lugs.
6. Examine the driving and driven clutch plates for signs of burning, scoring or wear. If the composition plates are black in colour or have a glazed appearance they should be renewed. The steel driving plates should have a matt grey finish, but if they are discoloured or warped it is a sign of overheating and the plates must be renewed.
7. Examine the back plate for scratches or other damage.
8. Examine the sun gear shaft for cracks. Examine the splines for damage, examine the bushes for scoring

Printed in Great Britain
September 1971
T.S.D. 2476

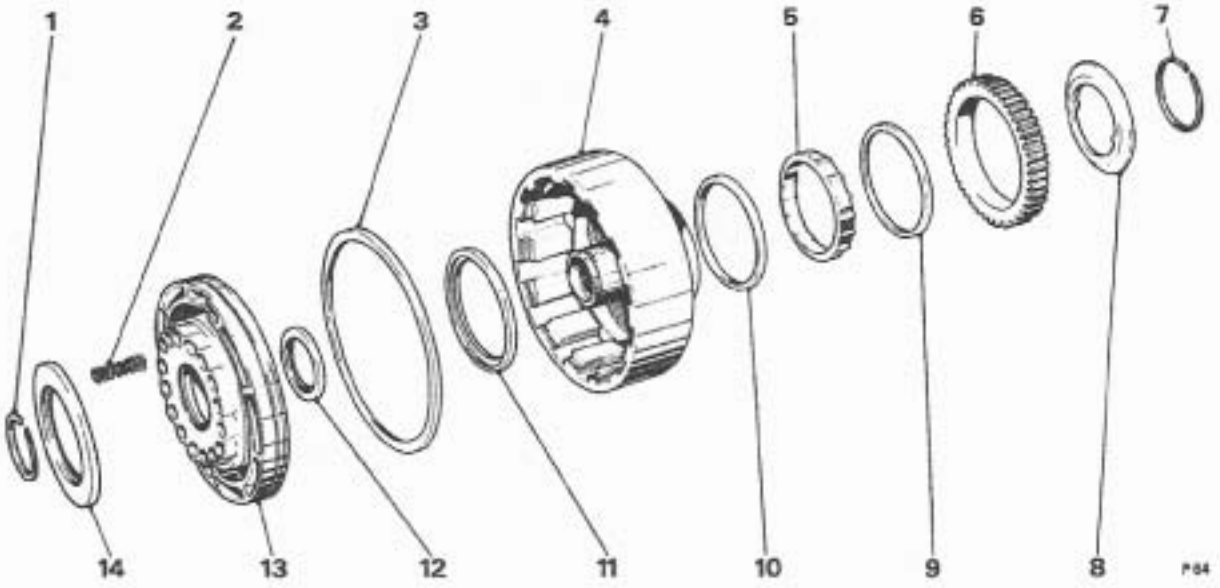

FIG. T248 DIRECT CLUTCH AND INTERMEDIATE SPRAG ASSEMBLY

1 Snap ring
2 Piston release spring (16)
3 Piston outer seal
4 Direct clutch drum and sprag inner race
5 Sprag assembly
6 Sprag outer race
7 Snap ring
8 Sprag retainer
9 Sprag bush
10 Sprag bush
11 Piston centre seal
12 Piston inner seal
13 Direct clutch piston
14 Clutch spring retainer

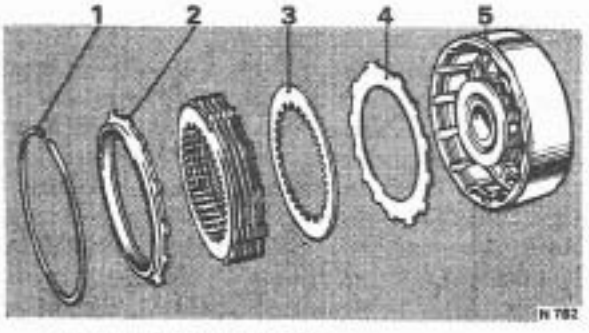

FIG. T249 DIRECT CLUTCH—EXPLODED

1 Snap ring
2 Back plate
3 Composition plate
4 Steel plate
5 Direct drum and piston assembly

and the ground bush journals for damage. Ensure that the oil feed hole is clear.

9. Examine the piston for cracks. Ensure that the check balls operate freely.

10. Examine the springs for collapsed coils or distortion. If one or more springs show these symptoms all sixteen springs must be renewed.

11. Examine the front friction band for wear at the anchor and apply lugs and for the presence of metallic particles in the band lining. Also examine the band lining for cracks, flaking, burning and for the lining becoming loose.

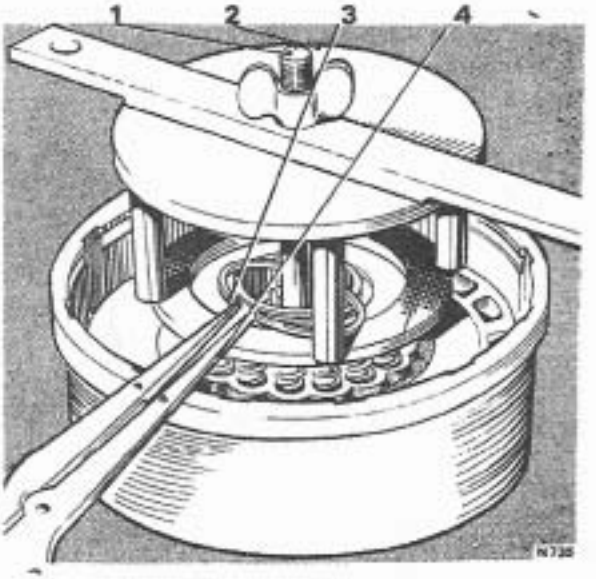

FIG. T250 REMOVING AND FITTING THE DIRECT CLUTCH HOUSING SNAP RING

1 Spring compressing tool
2 Clutch spring compressor (seated on adapter)
3 Snap ring
4 Snap ring pliers

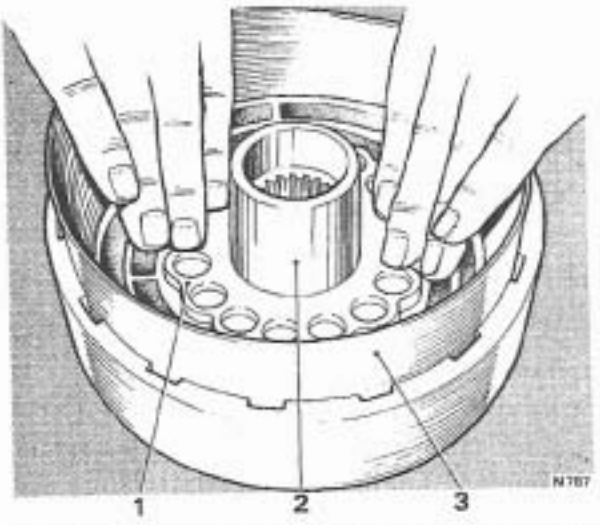

FIG. T251 FITTING THE DIRECT CLUTCH PISTON

1 Direct clutch piston
2 Inner seal protector
3 Outer seal protector

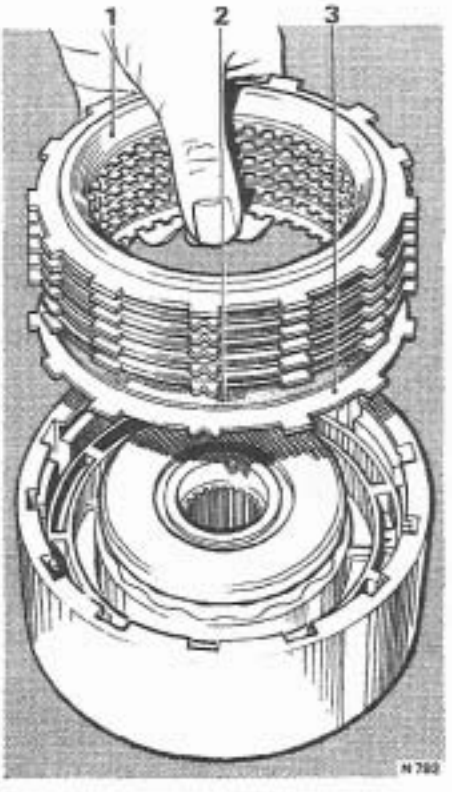

FIG. T252 FITTING THE DIRECT CLUTCH PLATES

1 Back plate
2 Composition plate (5)
3 Steel plate (5)

Direct clutch and intermediate roller assembly—To assemble

1. Lubricate new inner and outer clutch piston seals with clean transmission fluid. Lubricate the seal grooves in the direct clutch piston then fit the seals with the lips facing away from the spring pockets.

Note Ensure that the piston is correct (i.e. direct clutch piston — check ball in piston).

2. Lubricate a new centre seal with clean transmission fluid. Lubricate the seal groove in the direct clutch housing then fit the seal with the lip uppermost.
3. Fit the forward and direct clutch inner seal protector RH 7968 (J-21362) over the direct clutch hub.
4. Fit the clutch piston inside the forward and direct clutch piston installing tool RH 7949 (J-21409). Fit the assembly into the direct clutch housing (*see Fig. T251*).
5. Fit the piston by turning it clockwise as it is pushed down.
6. Fit the sixteen clutch release springs into the spring pockets in the clutch piston.
7. Position the spring retainer over the springs.
8. Using clutch spring compressor RH 7965 (J-4670), rear clutch spring compressor RH 7967 (J-6129) and adapter RH 7966 (J-21664), compress the springs, ensuring that the retainer does not catch in the snap ring groove. Fit the snap ring then remove the tools.

Caution Ensure that the clutch release springs are not leaning. If necessary, push the springs into an upright position using a small screwdriver.

9. Lubricate the five flat and one waved steel plates and the composition plates with clean transmission fluid then fit the plates into the clutch drum. Commence with the waved steel plate and then alternate composition and steel plates.

Note Do not use radially grooved composition plates at this point of the assembly.

10. Fit the direct clutch backing plate over the clutch plates and fit the large snap ring.

Note Install rollers that may have come out of the roller cage by compressing the energising spring with the forefinger and inserting the roller from the outside.

11. Turn the clutch unit over and install the roller clutch assembly onto the intermediate clutch inner cam.
12. Fit the intermediate clutch outer race with a clockwise turning motion.

Note When fitted, the outer race should **not** turn anti-clockwise.

13. Fit the roller clutch retainer and snap ring.
14. Fit the direct clutch assembly onto the centre

support then air test the direct clutch to ensure that it operates correctly (*see Fig. T253*). Use an air pressure of approximately 70 lb/sq. in. (4,92 kg/sq. cm.).

Note If air is applied to the reverse passage (right-hand oil feed hole) it will escape from the direct clutch passage (left-hand oil feed hole). This is considered normal. Also, apply air to the left-hand oil feed hole to actuate the piston and apply the direct clutch.

Turbine shaft, forward and direct clutches, sun gear shaft and front band—To fit

1. Fit the front band so that the band anchor hole fits over the band anchor pin and the band apply lug faces the servo hole (*see Fig. T254*).
2. Fit the sun gear shaft with the longer splined end innermost.
3. Fit the direct clutch housing and intermediate sprag roller assembly onto the centre support as follows.
4. Ensure that the ends of the oil sealing rings on the centre support are interlocked, and that the rings are lubricated.
5. Carefully slide the direct clutch drum onto the centre support sleeve, at the same time, engage the drum internal splines with the splines on the sun gear shaft.
6. Ensure that the clutch drum hub 'bottoms' on the sun gear shaft and that the splines on the forward end of the sun gear shaft are flush with the splines in the direct clutch drum.

Note It will be necessary to rotate the clutch drum to allow the sprag roller outer race to line up with the intermediate clutch plates. If necessary, remove the direct clutch driving and driven plates to facilitate the handling of the drum.

7. Fit the bronze thrust washer onto the forward clutch hub; retain the washer in position with petroleum jelly.
8. Position the transmission horizontally in the transmission holding fixture then fit the forward clutch assembly and the turbine shaft.
9. Ensure that the end of the mainshaft fully enters into the forward clutch hub.
10. It will be necessary to rotate the clutch drum to allow the direct clutch driving hub to line up with the clutch plates in the direct clutch.
11. When the forward clutch is correctly seated it should be approximately 1·25 in. (3,175 cm.) from the oil pump face in the transmission casing.

Note The missing internal splines in the forward clutch hub are lubrication passages and do not have to be aligned with any particular splines on the mainshaft.

12. Fit the oil pump.

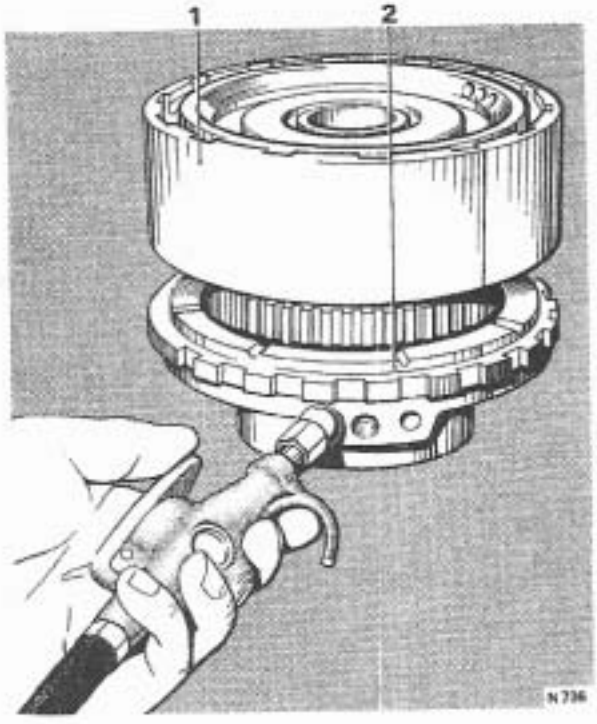

FIG. T253 AIR TESTING THE DIRECT CLUTCH

1 Direct clutch assembly
2 Centre support assembly

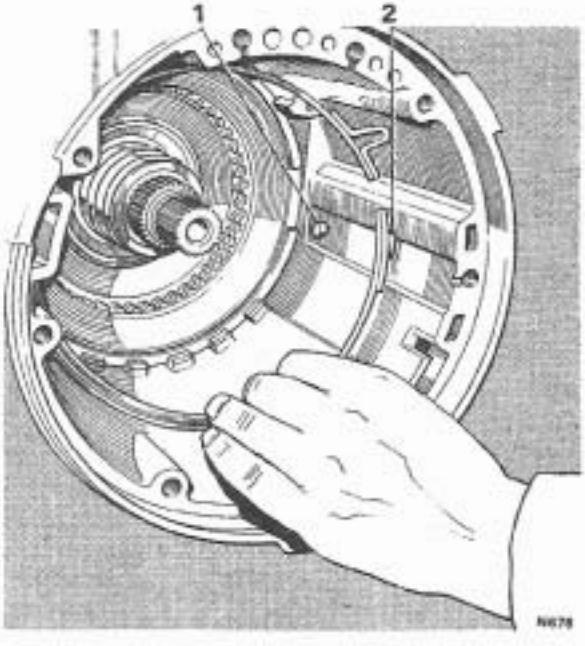

FIG. T254 FITTING THE FRONT BAND

1 Anchor pin
2 Front band

Printed in Great Britain
September 1971
T.S.D. 2476

Printed in Great Britain
September 1971
T.S.D. 2476

Section T22
INTERMEDIATE CLUTCH, GEAR UNIT, CENTRE SUPPORT and REACTION CARRIER

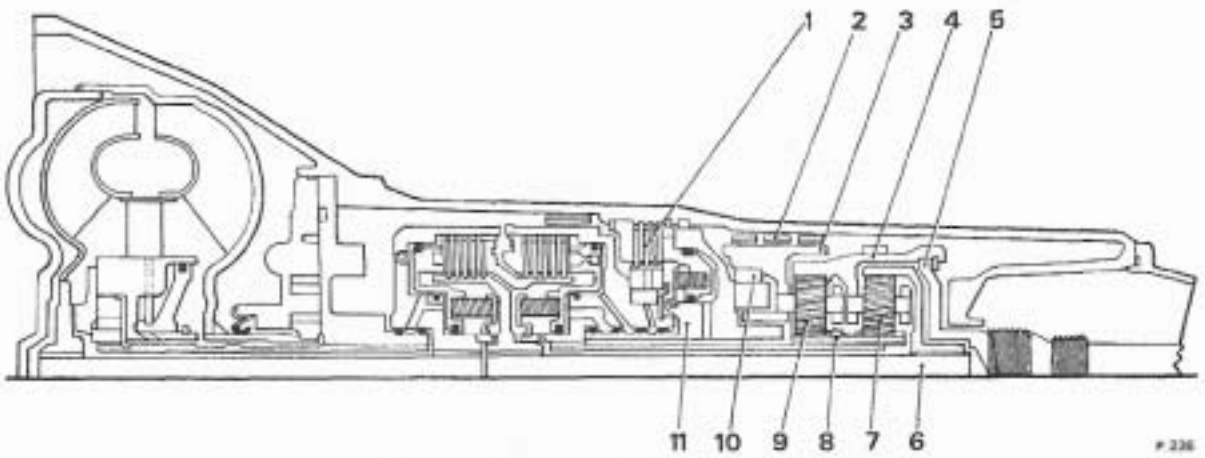

FIG. T255 SECTIONED VIEW OF THE TRANSMISSION SHOWING THE INTERMEDIATE CLUTCH AND GEAR UNIT

1 Intermediate clutch
2 Rear band
3 Reaction carrier
4 Output carrier
5 Output shaft driving flange
6 Mainshaft
7 Rear planet pinion
8 Sun gear
9 Front planet pinion
10 Rear sprag
11 Centre support

The intermediate clutch comprises three steel plates, three composition plates and an apply piston. The steel plates are slotted directly into the transmission casing whilst the composition plates engage in splines machined in the intermediate roller outer race.

The compound planetary gear unit consists of an internal gear, which is splined onto the mainshaft, an output planet carrier and pinions, an output shaft which is mechanically connected to the output carrier, and a sun gear which is splined onto the mainshaft (*see Fig. T255*).

The centre support is keyed and bolted to the transmission casing and forms part of the reaction carrier roller assembly. The oil delivery sleeve, which supplies oil pressure to the direct clutch and the intermediate roller is an integral part of the centre support. The support also houses the piston which applies the intermediate clutch.

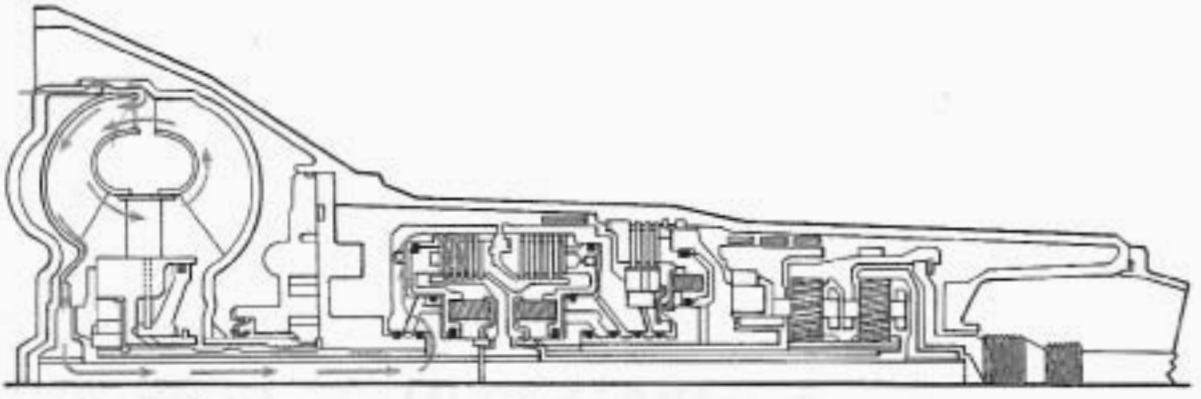

P232

FIG. T256 NEUTRAL—ENGINE RUNNING

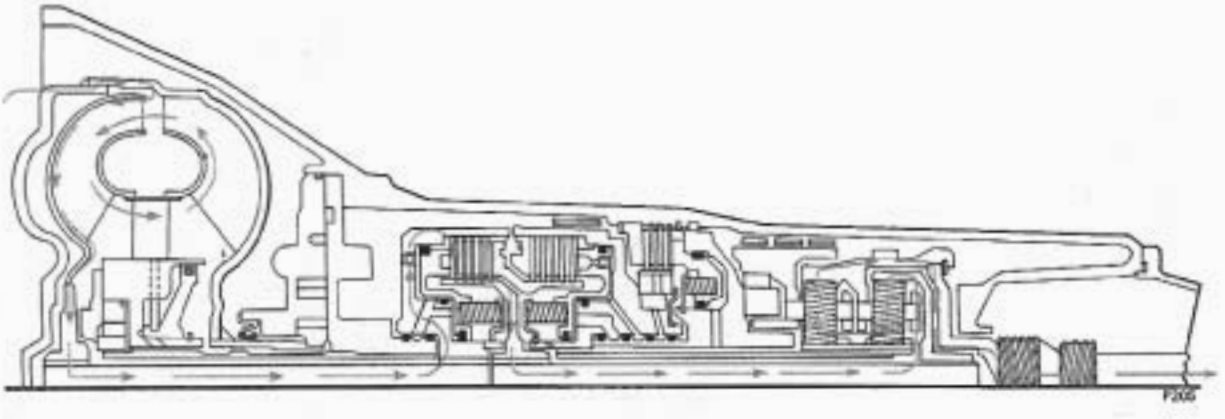

P205

FIG. T257 DRIVE RANGE—1ST GEAR

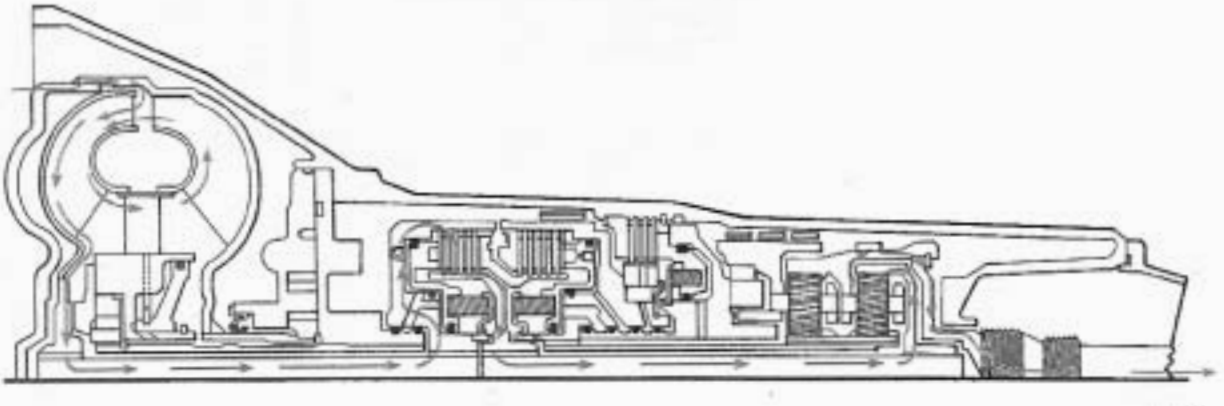

P236

FIG. T258 DRIVE RANGE—2ND GEAR

Printed in Great Britain

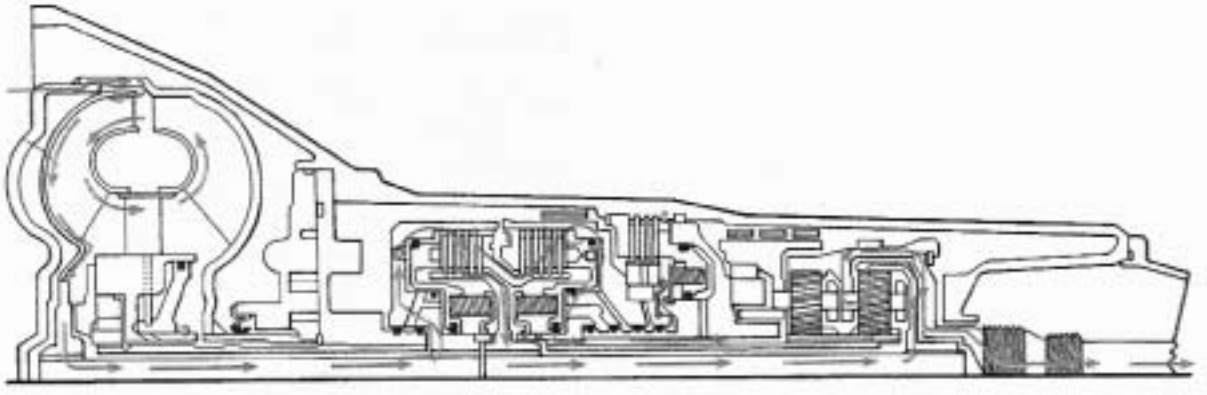

FIG. T259 DRIVE RANGE—3RD GEAR

September 1971

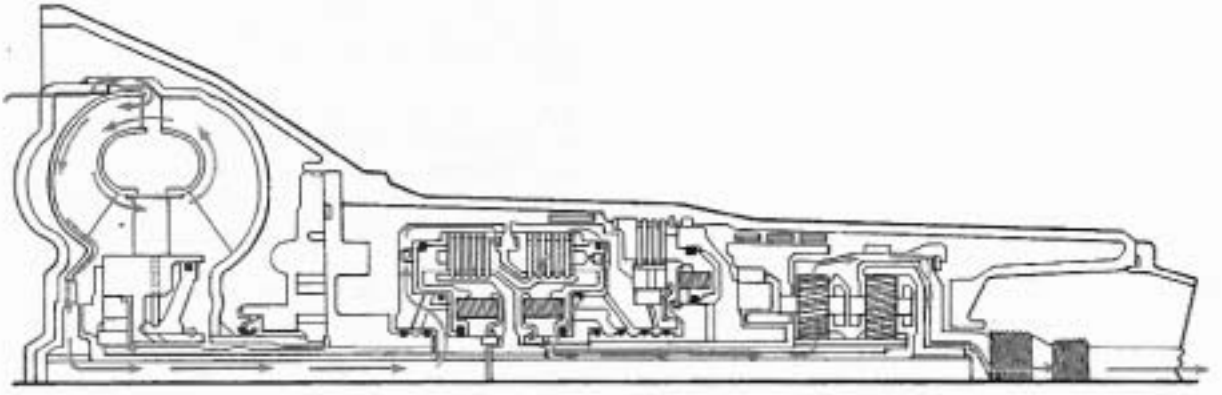

FIG. T260 REVERSE

T.S.D. 2476

The reaction carrier comprises a drum, a set of planet pinions and the outer race of the Low roller. The roller outer race is pressed into, and dowelled to, the reaction drum.

When the mainshaft rotates, the internal gear to which it is splined is driven clockwise. This causes the rear planet pinions to idle clockwise and drive the sun gear anti-clockwise.

The front and rear sun gears are integral so they turn as one. As a result, the front planet pinions also idle clockwise and drive the front internal gear clockwise.

The front internal gear is an integral part of the output carrier and is thus connected to the output shaft. This reacts with a force on the front pinions which are trying to drive the front internal gear clockwise. This reaction tends to rotate the front carrier assembly anti-clockwise instead of allowing the force to turn the internal gear and output shaft against the weight of the car.

To make the gear set effective in driving the car, a roller assembly is used to hold the carrier against anti-clockwise rotation. This roller assembly is in effect a one-way clutch which allows a rotating part to turn one way but not the other.

The roller assembly is fitted in such a manner that its elements will lock and prevent the reaction carrier from rotating anti-clockwise. This provides the required reaction and causes the front planet pinions to drive the front internal gear and output shaft in reduction at a ratio of approximately 2·5 : 1. This gear ratio, coupled with a maximum torque converter reduction of approximately 2 : 1 gives an overall ratio of almost 5 : 1 in first gear.

FIG. T261 FITTING THE GEAR UNIT INTO THE HOLDING FIXTURE

1 Gear assembly removal and fitting adapter
2 Slide hammer
3 Adapter
4 Holding fixture

As the speed of the car increases, less torque multiplication is required so that the coupling will become more efficient, and it is desirable also to move to a lower ratio. This is accomplished with the aid of the intermediate roller and clutch.

When the intermediate clutch is applied, the drive plates become locked to the reaction plates, and by doing so they lock the intermediate roller outer race to the transmission case.

This, in effect, holds the direct clutch drum, sun gear shaft and sun gear against anti-clockwise rotation. When the sun gear is stationary, the power flow is as follows.

Converter output is transmitted clockwise through the forward clutch to the mainshaft and rear internal gear. As the rear internal gear turns clockwise, the rear pinions rotate clockwise on their pins and 'walk around' the stationary sun gear. This moves the output carrier and output shaft clockwise in reduction at a ratio of approximately 1·5 : 1 (second gear).

The front gear unit is not required for second gear operation. However, because the output carrier is integral with the front internal gear, the front internal gear runs clockwise in reduction. This causes the front planet pinions to run clockwise around the stationary sun gear, turning the reaction carrier clockwise. This clockwise rotation of the reaction carrier causes the rear roller assembly to over-run or to become ineffective.

As the speed of the car increases further, a lower ratio is again required. The transmission is moved to third or direct gear. This is achieved by applying the direct clutch as well as the forward clutch so that both the rear internal gear and the sun gear rotate at the same speed.

In order to obtain Reverse, a rear friction band is used. This band locks the reaction carrier against clockwise rotation which would cause the Low or rear roller to over-run. Power flow through the transmission in Reverse is as follows.

Turbine torque from the converter is transmitted to the forward clutch drum; the forward clutch is released, thus disconnecting the flow of power to the mainshaft and rear internal gear. Instead of power flowing through the forward clutch, it flows from the turbine shaft, through the forward clutch drum, through the direct clutch hub to the direct clutch which is applied. This applies power to the sun gear shaft and sun gear, turning them clockwise. With the sun gear driving clockwise, the front pinions revolve anti-clockwise as idlers. This drives the front internal gear and output shaft anti-clockwise or in a reverse direction. The overall ratio in Reverse with maximum converter ratio and gear reduction is approximately 4 : 1.

In Intermediate range (second gear) with the accelerator pedal released, the car will slow down, using the engine as a brake. In this situation, however, the rear wheels will drive the transmission through the output shaft and, as a result, the intermediate roller would attempt to over-run. To prevent this happening the front band is applied to the direct clutch drum, holding

Printed in Great Britain
September 1971
T.S.D. 2476

it stationary, thus keeping the transmission in second gear to provide effective engine braking.

For even greater engine braking, the transmission can be placed into Low range. At speeds below approximately 40 m.p.h. (64 k.p.h.) the transmission will move to first gear. When the car is in first gear and the throttle is closed, the Low roller tends to over-run. When the Low/Reverse band is applied, the reaction carrier is prevented from over-running the roller and the transmission is retained in first gear.

The following illustrations and text give a summary of the flow of power through the transmission in various gears.

Summary of power flow

Neutral—Engine running

Forward clutch released, direct clutch released, intermediate clutch released, roller clutch ineffective, front band released, intermediate roller clutch ineffective, rear band released.

In Neutral, all clutches and bands are released; therefore no power is transmitted from the torque converter turbine to the planetary gear train or output shaft (*see Fig. T256*).

Drive range—First gear

Forward clutch applied, direct clutch released, intermediate clutch released, roller clutch effective, front band released, intermediate roller clutch ineffective, rear band released.

With the selector in Drive range, the forward clutch is applied. This delivers turbine torque to the mainshaft and turns the rear internal gear clockwise. Clockwise motion of the rear internal gear causes the pinions to turn clockwise, driving the sun gear anti-clockwise. In turn, the sun gear drives the front pinions clockwise, driving the front internal gear, output carrier and output shaft clockwise at a reduction of approximately 2·5 : 1. The reaction of the front pinions against the front internal gear is taken by the reaction carrier and roller clutch assembly to the transmission case (*see Fig. T257*). (The approximate stall ratio equals 5 : 1).

Drive range—Second gear

Forward clutch applied, direct clutch released, intermediate clutch applied, roller clutch ineffective, front band released, intermediate roller clutch effective, rear band released.

In second gear, the intermediate clutch is applied to allow the intermediate roller clutch to hold the sun gear against anti-clockwise rotation. Turbine torque, through the forward clutch, is applied clockwise through the mainshaft, to the rear internal gear. Clockwise rotation of the rear internal gear turns the pinions clockwise against the stationary sun gear. This causes the output carrier and output shaft to turn clockwise at approximately 1·5 : 1 ratio (*see Fig. T258*).

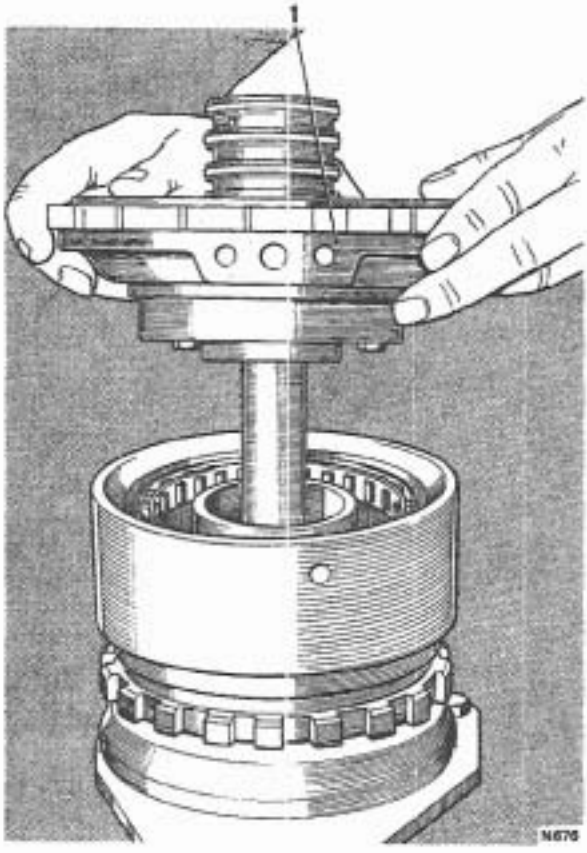

FIG. T262 REMOVING THE CENTRE SUPPORT ASSEMBLY

1 Centre support

Drive range—Third gear

Forward clutch applied, direct clutch applied, intermediate clutch applied, roller clutch ineffective, front band released, intermediate roller ineffective, rear band released.

In direct drive, engine torque is transmitted to the converter, then through the forward clutch to the mainshaft and the rear internal gear (*see Fig. T259*). Because the direct clutch is applied, equal power is transmitted also to the sun gear shaft and the sun gear. Since both the sun gear and the internal gears are now turning at the same speed, the planetary gear set is essentially locked and turns as one unit in direct drive (ratio 1 : 1).

Reverse

Forward clutch released, direct clutch applied, intermediate clutch released, roller clutch ineffective, front band released, intermediate roller clutch ineffective, rear band applied.

In Reverse, the direct clutch is applied to transmit turbine torque from the forward clutch drum to the sun gear shaft and sun gear (*see Fig. T260*). The rear band is applied; this prevents the reaction carrier from

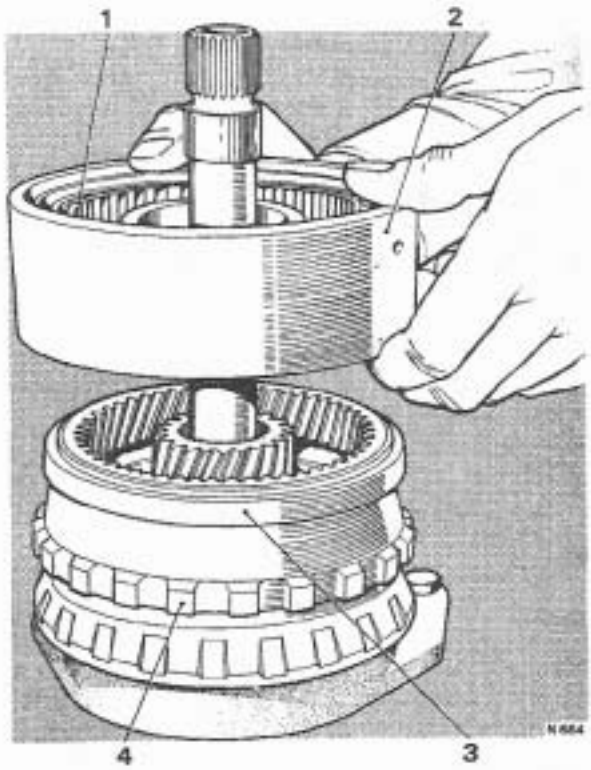

FIG. T263 REMOVING THE REACTION CARRIER AND REAR SPRAG ASSEMBLY

1 Sprag assembly
2 Reaction carrier
3 Gear ring
4 Output carrier

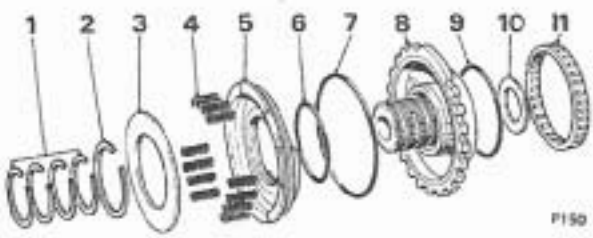

FIG. T264 CENTRE SUPPORT—EXPLODED

1 Teflon oil seal rings
2 Snap ring
3 Intermediate clutch spring retainer
4 Intermediate clutch release springs
5 Intermediate clutch piston
6 Intermediate clutch inner seal
7 Intermediate clutch outer seal
8 Centre support assembly
9 Support to case spacer
10 Thrust washer
11 Roller assembly

turning clockwise. Clockwise torque to the sun gear causes the front pinions and front internal gear to turn anti-clockwise in reduction. The front internal gear is directly connected to the output shaft, thus providing the reverse output gear ratio of approximately 2 : 1. The reverse torque multiplication at stall (converter and gear ratios) is approximately 4 : 1.

Intermediate clutch, gear unit, centre support and reaction carrier—To remove

Before the intermediate clutch, gear unit and their associated parts can be removed, the transmission must be removed from the car.

Remove the following units.

1. Sump, strainer and intake pipe assembly.
2. Control valve unit.
3. Rear servo.
4. Control valve spacer, check balls and front servo.
5. Oil pump.
6. Turbine shaft, forward clutch, direct clutch, sun gear shaft and front band.
7. Remove the centre support bolt from the transmission case. This is the socket-headed cap screw located in the lower face of the transmission case at the rear of the control valve unit oil passages.
8. Remove the snap ring which secures the intermediate clutch back plate.
9. Remove the back plate then withdraw the three composition plates and the three steel plates.
10. Using a pair of long-nose pliers remove the snap ring which retains the centre support in the case.
11. Fit tool RH 7962 (J–21795) onto the end of the mainshaft so that the tangs engage in the groove in the shaft.
12. Tighten the screw on the tool to secure the tool on the shaft and to prevent movement of the rearmost sprag during the removal of the gear unit.
13. Obtain a length of tube of suitable diameter which will fit over the output shaft and can be used as a handle. This will prevent damage to the case bush when removing the gear unit, centre support and reaction carrier.

Note Slightly slacken the transmission holding fixture pivot pin so that the gear unit assembly does not bind when it is being removed from the case.

14. With the transmission case in a horizontal position, move the complete assembly toward the front of the case to facilitate the subsequent removal.
15. Carefully withdraw the complete assembly from the case.

Caution Do not drop or bump the assembly in the transmission casing during the removal operation. This could result in damage to the output shaft bush in the case as well as to the assembly itself.

Printed in Great Britain
September 1971
T.S.D. 2476

16. Remove the output shaft thrust washer from either the output shaft or the case.
17. Using adapter RH 7960 (J–21364) in the rear unit holding fixture RH 7959 (J–6116), fit the gear unit assembly into the holding fixture with the mainshaft pointing upward (*see Fig. T261*); remove the tool RH 7962 (J–21795).
18. Remove the rear unit selective washer from the transmission case.
19. Remove the support to case spacer.
20. Remove the rear band assembly. To facilitate removal, rotate the band lugs away from the pins and pull the band assembly out of transmission case.
21. Remove the centre support assembly from the reaction carrier (*see Fig. T262*).
22. Withdraw the centre support to reaction carrier thrust washer.

Note The thrust washer and the race may have adhered to the back of the centre support. If so, remove them from the centre support.

23. Remove the reaction carrier and roller clutch assembly from the output carrier (*see Fig. T263*); remove the roller clutch assembly from the reaction carrier.

Centre support and intermediate clutch piston—To dismantle

1. Remove the four oil seal rings from the centre support (*see the exploded view in Fig. T264*); discard the rings.

Note From **Transmission Serial Number 70-RR-2106** and onwards, a 'Teflon' oil sealing ring is fitted into the ring groove at the base of the centre support tower. On these later centre supports remove only the three cast iron oil sealing rings.

2. Using clutch spring compressor RH 7965 (J–4670) and rear clutch spring compressor RH 7967 (J–6129), compress the springs then remove the snap ring (*see Fig. T265*).
3. Remove the tools then remove the spring retainer and the clutch release springs.
4. Remove the intermediate clutch piston from the centre support.
5. Remove and discard the inner and outer seals from the clutch piston.

Note **Do not** remove the three setscrews which secure the roller clutch inner race to the centre support.

Centre support and intermediate clutch piston—To inspect

1. Wash all parts in clean paraffin (kerosene) then dry with compressed air.
2. Examine the roller clutch inner race for scratches and indentations. Ensure that the lubrication hole is clear.

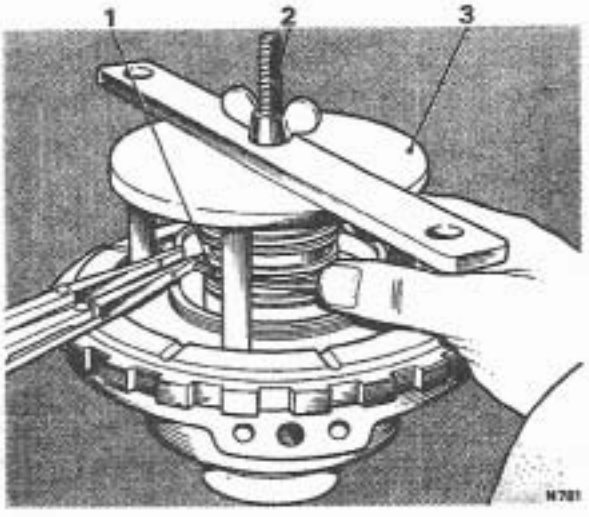

FIG. T265 REMOVING AND FITTING THE INTERMEDIATE CLUTCH PISTON SNAP RING

1 Snap ring
2 Rear clutch spring compressor
3 Clutch spring compressor

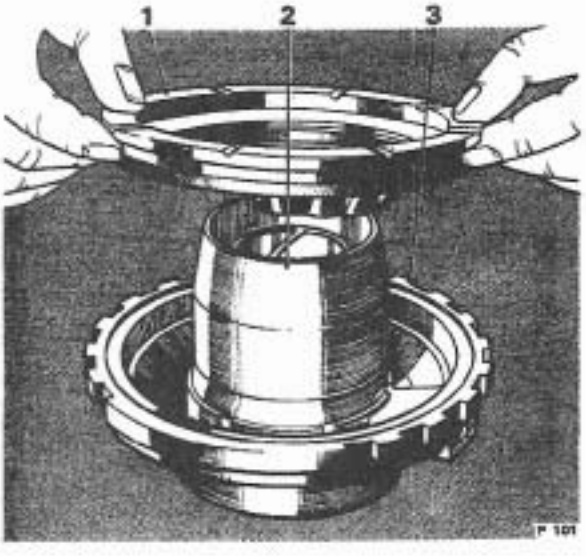

FIG. T266 FITTING THE INTERMEDIATE CLUTCH PISTON

1 Intermediate clutch piston
2 Guide sleeve
3 Centre support

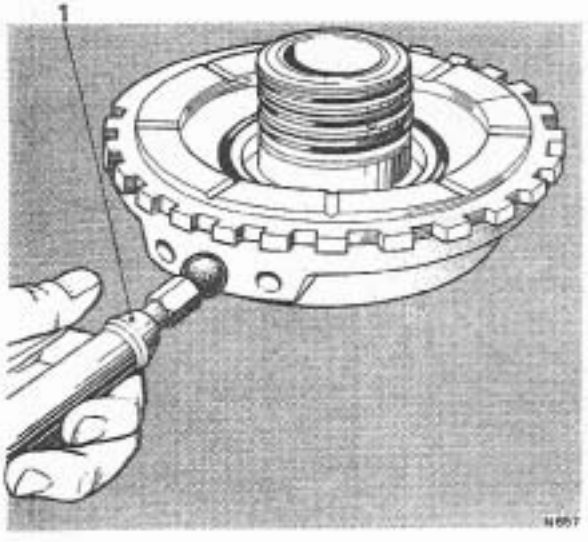

FIG. T267 AIR TESTING THE INTERMEDIATE CLUTCH
1 Air line nozzle

3. Examine the bush for scoring or wear.
4. Ensure that the oil ring grooves are clean and are not damaged.
5. Air test the lubrication passages to ensure that they are clear and are not interconnected.
6. Examine the piston bore in the centre support for scratches or damage.
7. Examine the piston seal grooves for damage and ensure that they are clean.
8. Examine the piston for cracks or porosity.
9. Examine the springs for collapsed coils or signs of distortion. Check the spring length against that of a new spring before deciding whether to renew the complete set of springs.

Centre support and intermediate clutch piston—To assemble

1. Lubricate a new inner and a new outer seal with clean transmission fluid. Lubricate the seal grooves in the intermediate clutch piston and fit the seals with the lips facing away from the spring pockets.
2. Fit the intermediate clutch inner seal protector RH 7969 (J-21363) over the centre support hub.
3. Fit the intermediate clutch piston as shown in Figure T266. Ensure that it seats fully in the centre support.
4. Fit the three clutch release springs into the pockets in the clutch piston.
5. Position the spring retainer centrally over the springs.
6. Using clutch spring compressor RH 7965 (J-4670) in conjunction with rear clutch spring compressor RH 7967 (J-6129) compress the spring retainer, ensuring that the retainer does not catch in the snap ring groove. Fit the snap ring then remove the tools.

Transmissions prior to Serial Number 70-RR 2106

7. Fit four new oil sealing rings onto the centre support; interlock the ends of the rings.

Note **Transmission Serial Number 70-RR-2106** and onwards, fit three new oil sealing rings onto the centre support and interlock the end of the rings. If the 'Teflon' oil sealing ring requires replacement, fit a fourth cast iron oil sealing ring.

8. Air test the operation of the intermediate clutch piston. Apply an air pressure of approximately 70 lb/sq.in. (4,92 kg/sq.cm.) through the centre oil feed hole to actuate the clutch piston (*see Fig. T267*); the piston should be heard and felt to move.

Gear unit—To dismantle

1. Using adapter RH 7960 (J-21364) in rear unit holding fixture RH 7959 (J-6116), fit the gear unit into the holding fixture with the output shaft pointing downward. An exploded view of the gear unit is shown in Figure T268.
2. Remove the centre support-to-sun gear races and thrust bearing. The outer race may have been removed with the centre support.
3. Remove the sun gear from the output carrier assembly.

Remove the reaction carrier to output carrier thrust washer and front internal gear ring.

4. Invert the gear unit in the holding fixture so that the mainshaft is pointing downward.
5. Remove the snap ring which retains the output shaft in the output carrier; remove the output shaft.
6. Remove the thrust bearing and races from the rear internal gear.
7. Withdraw the rear internal gear and mainshaft from the output carrier; remove the thrust bearing and races from the inner face of the rear internal gear.
8. Remove the circlip from the end of the mainshaft then remove the rear internal gear.
9. Remove the output carrier from the holding fixture.

Output shaft—To inspect

1. Wash the output shaft in clean paraffin (kerosene) then dry off with compressed air.

Examine the bushing for wear.

2. Examine the bearing and thrust washer faces for damage.
3. Examine the governor drive gear for rough or damaged teeth.
4. Examine the splines for damage.
5. Check the orificed cup plug in the lubrication passage. Ensure that the orifice is clear (*see Fig. T269*).

Printed in Great Britain
September 1971
T.S.D. 2476

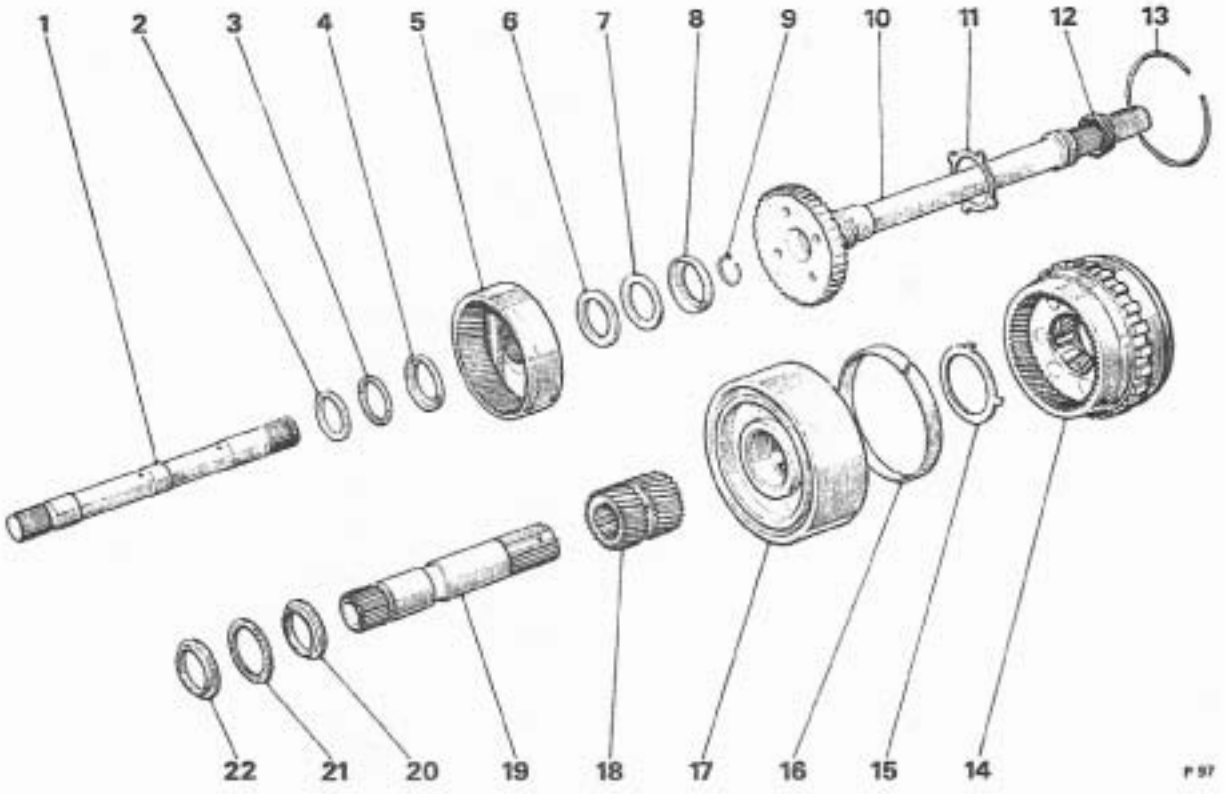

FIG. T268 GEAR UNIT—EXPLODED

1 Mainshaft
2 I/D flanged race
3 Thrust bearing
4 O/D flanged race
5 Rear internal gear
6 I/D flanged race
7 Thrust bearing
8 O/D flanged race
9 Snap ring
10 Output shaft
11 Flanged thrust washer
12 Speedometer drive gear
13 Snap ring
14 Output carrier assembly
15 Thrust washer
16 Front internal gearing
17 Reaction carrier assembly
18 Sun gear
19 Sun gear shaft
20 I/D flanged race
21 Thrust bearing
22 I/D flanged race

6. Examine the driving teeth for damage.

7. Examine the speedometer drive gear for rough or damaged teeth. If a gear is badly worn or damaged it can be renewed as follows.

Speedometer drive gear—To remove

Note A nylon speedometer drive gear is installed **only** at the factory. All replacement drive gears are manufactured from steel.

1. If a **nylon gear** is fitted to the shaft, depress the retaining clip and slide the gear off the output shaft (*see Fig. T270*).

2. If a **steel gear** is fitted to the shaft, install the

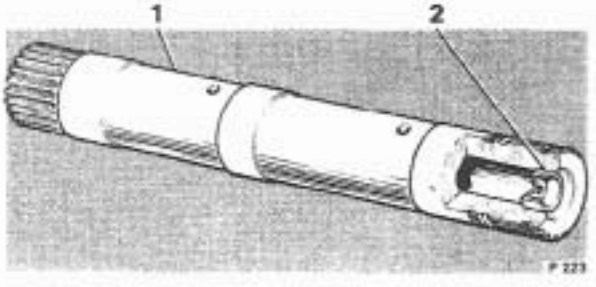

FIG. T269 MAINSHAFT AND PLUG ASSEMBLY

1 Mainshaft
2 Orifice cup plug

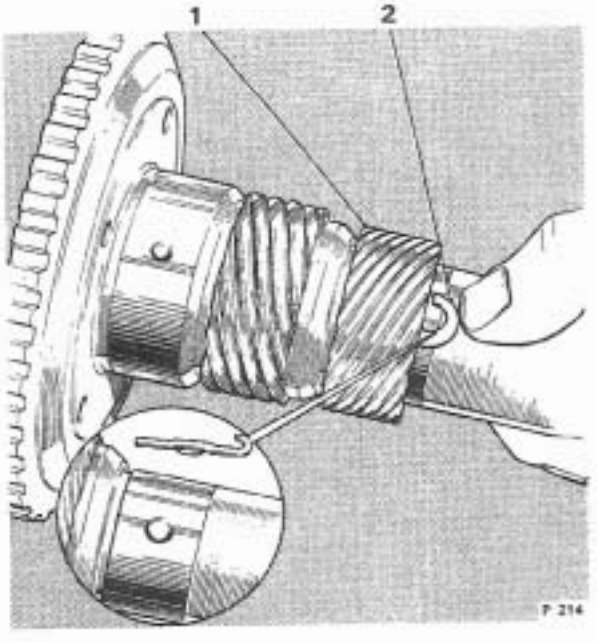

FIG. T270 REMOVING NYLON SPEEDOMETER DRIVE GEAR

1 Nylon gear
2 Retaining clip

speedometer drive gear remover J–21427 with pulley puller RH 7791 (J–8433) and attach using bolts J–21797 onto the output shaft, so that the puller bolt indexes with the end of the shaft.

3. The flat face of the remover tool should be under the front face of the drive gear (*see Fig. T271*).

4. Tighten the bolt on the puller until the gear is free on the shaft.

5. Remove the tools and the gear from the shaft.

Speedometer drive gear—To fit

1. To fit a **nylon gear,** (*see note under Speedometer drive gear — To remove*) align the slot in the speedometer drive gear with the retaining clip and install the drive gear (*see Fig. T272*).

2. To fit a steel gear, lightly lubricate the bore of the gear then fit it over the output shaft.

3. Support the output shaft and drive the new steel gear into position on the shaft using a suitable length of tube and a mallet.

Caution Use a tube which fits closely over the output shaft. The ends of the tube must be square with the bore. Ensure that the end of the tube which contacts the gear is smooth and free from burrs.

4. Any contact with the gear teeth as the gear is driven into position will result in damage to the gear.

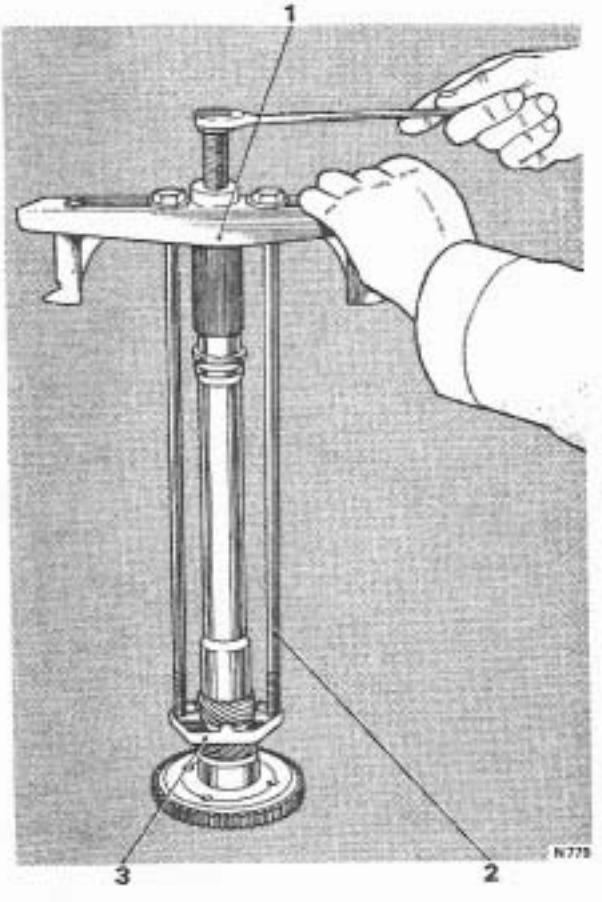

FIG. T271 REMOVING A STEEL SPEEDOMETER DRIVE GEAR

1 Pulley remover
2 Removal bolts
3 Drive gear extractor

5. Drive the gear down the shaft until the distance from the rear face of the gear to the end of the output shaft measures 15·00 in. (38,1 cm.) (*see Fig. T273*).

Mainshaft—To inspect

1. Wash the mainshaft in clean paraffin (kerosene) then dry with compressed air.

2. Examine the shaft for cracks or distortion.

3. Examine the splines for damage.

4. Examine the ground journals for scratches or damage.

5. Examine the snap ring groove for damage.

6. Examine for an orificed cup plug in the end of the mainshaft.

7. If a cup plug is fitted to the mainshaft, remove with a 0·25 in. (6,35 mm.) diameter rod 12·00 in. (30,48 cm.) long.

8. The deletion of the cup plug improves the flow of lubricant.

Printed in Great Britain

September 1971

T.S.D. 2476

Rear internal gear and sun gear—To inspect

1. Wash the rear internal gear and the sun gear in clean paraffin (kerosene) then dry with compressed air.
2. Examine all the gear teeth for wear or damage.
3. Examine the splines for damage.
4. Examine the gears for cracks.

Output carrier assembly—To inspect

1. Wash the output carrier assembly in clean paraffin (kerosene) then dry with compressed air.
2. Examine the front internal gear for damaged teeth.
3. Examine the pinion gears for damage, rough bearings or excessive side movement.
4. Check the end float of the pinions with the aid of a feeler gauge (*see Fig. T273*). The end float should be between 0·009 in. and 0·024 in. (0,228 mm. and 0,610 mm.).
5. Examine the parking gear lugs for cracks or damage.
6. Examine for damage the splines which drive the output shaft.
7. Examine the front internal gear ring for flaking or cracks.

Reaction carrier assembly—To inspect

1. Examine the surface on which the rear band applies, for signs of burning or scoring.
2. Examine the sprag outer race or roller clutch outer cam, for scoring or wear.

Note The normal wear pattern on an inner or outer race may tend to make the races look worse than they are. Do not discard the races unless the track is pitted, scored or uneven.

3. Examine the thrust washer surfaces for signs of scoring or wear.
4. Examine the bush for damage. If the bush is damaged, the carrier must be renewed.
5. Examine the pinion gears for damage, rough bearings, or excessive side movement.
6. Check the pinion end float. This should be between 0·009 in. and 0·024 in. (0,228 mm. and 0,610 mm.).

Pinion gears—To renew (reaction and output carrier assemblies)

Should the pinion gears need renewing, proceed as follows.

Note If it is necessary to replace the pinion gear pinion washer, pinion pin or needle bearing roller always consult the appropriate service literature to ascertain that the correct parts are to be fitted.

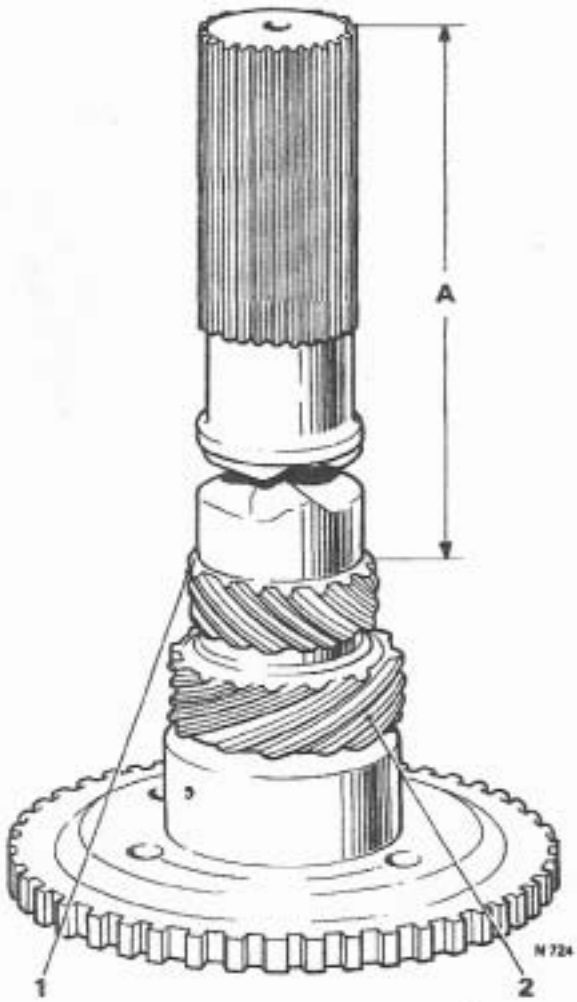

FIG. T272 SPEEDOMETER DRIVING GEAR—FITTED

1 Speedometer driving gear
2 Governor driving gear
A 15.00 in. (38,1 cm.)

A change in the outside diameter of the pinion pin has taken place, this also effects the parts listed above. When measuring the diameter of a pin, measure near the end.

Early type — 0·3928 in. to 0·3930 in. (9,97 mm. to 9,98 mm.)
Later type — 0·4340 in. to 0·4342 in. (11,02 mm. to 11,03 mm.)

Carrier assemblies with larger pins are interchangeable with carrier assemblies having smaller pins.

1. Support the carrier assembly on its **front face.**
2. Using a 0·50 in. (12,7 mm.) diameter drill remove the stake marks from the end of the pinion pin(s). Ensure that the drill does not remove any

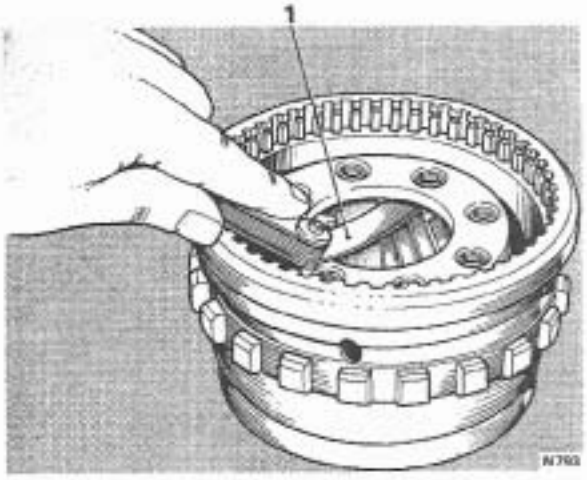

FIG. T273 CHECKING OUTPUT CARRIER PINION END FLOAT

1 0.009 in. to 0.024 in. (2,29 mm. to 6,1 mm.)

metal from the carrier as this will weaken the component and could result in a failure.

3. Using a tapered punch, drive or press the pinions out of the carrier.

4. Remove the punch, gears, thrust washers and needle roller bearings.

5. Examine the pinion thrust faces in the pinion gear pockets for burrs and stone off as necessary. Thoroughly wash and dry the carrier.

6. Ensure that the new gears are clean and free from burrs then fit the needle bearings into each pinion gear. Use petroleum jelly to retain the bearings and use a pinion pin as a guide when fitting the bearings.

7. Fit a bronze and a steel thrust washer on each side of the pinion gear with the steel washer next to the gear (*see exploded view in Fig. T274*). Hold the washers in place with a smear of petroleum jelly.

8. Fit the pinion gear assembly into position in the carrier, then fit a pilot pin through the rear face of the assembly to centralise and hold the parts in position.

9. Drive a new pinion pin into position from the front, rotating the pinion whilst the pin is being driven in.

10. Ensure that the headed end of the pin is flush or below the face of the carrier.

11. Secure the punch in a bench vice so that it can be used as an anvil.

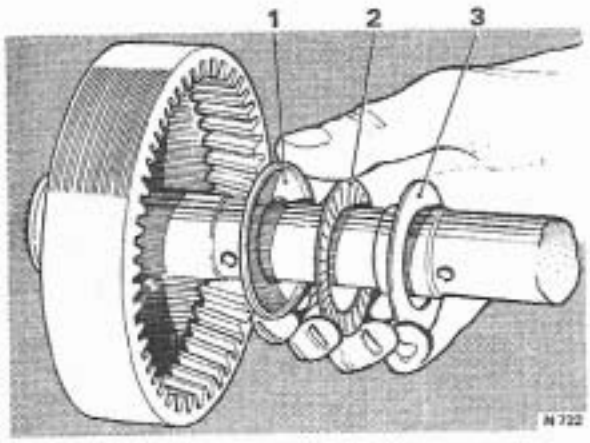

FIG. T274 FITTING RACES AND THRUST BEARINGS TO INNER FACE OF REAR INTERNAL GEAR

1 O/D flanged race
2 Thrust bearing
3 I/D flanged race

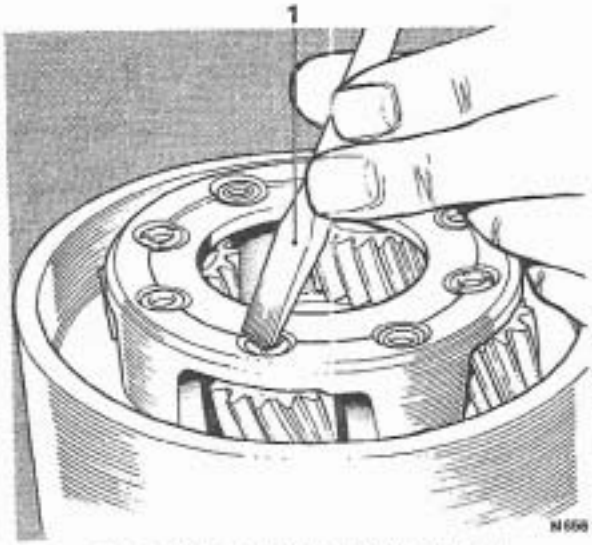

FIG. T275 STAKING A PINION PIN

1 Blunt chisel

12. Support the carrier with the head of the pin resting on the punch then, using a chisel with a radiused end stake the opposite end of the pin in three places (*see Fig. T275*).

Note Both ends of the pin must lie below the face of the carrier, otherwise a foul may occur between the pin and the adjacent component.

Repeat the fitting procedure for the remaining pins.

Rear roller assembly—To inspect

If a sprag clutch is fitted in place of a roller clutch proceed as follows:

1. Wash the assembly in clean paraffin (kerosene) then dry with compressed air.

2. Examine the roller for damaged members.

3. Examine the roller cage and retaining spring for damage.

Printed in Great Britain

September 1971

T.S.D. 2476

Roller clutch assembly—To inspect

If a roller clutch is fitted in place of a sprag clutch proceed as follows:

1. Inspect the roller clutch for damaged rollers or springs.
2. Inspect the roller clutch cage for damage.

Note If the later type roller clutch parts require replacement and the components are not available, consult the latest applicable service literature regarding the fitting of the earlier type of sprag clutch.

Clutch plates and rear band—To inspect

1. Examine the condition of the composition plates.
2. Check that the composition material has not lifted or flaked. If the plates are black, burned or shiny they should be renewed.
3. Examine the condition of the reaction (steel) plates. Check for scores or damage. The plates are normally matt grey in colour. If they are burned or distorted they must be renewed.
4. Examine the rear band for cracks or distortion.
5. Examine the ends of the band for damage at the anchor lugs and the apply lug.
6. Examine the lining for cracks, flaking and burning.
7. Ensure that the lining is secured to the band.

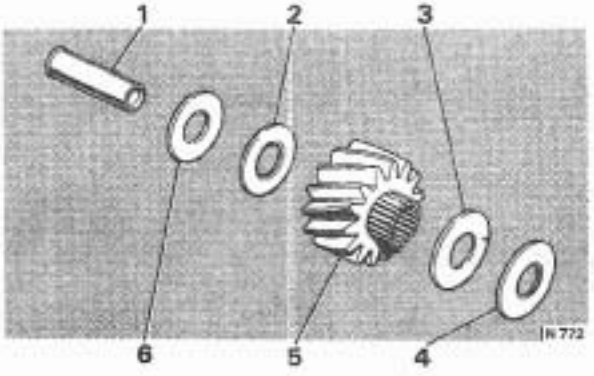

FIG. T276 PLANET PINION GEAR—EXPLODED

1 Pinion pin
2 Steel washer
3 Steel washer
4 Bronze washer
5 Planet pinion
6 Bronze washer

Gear unit and centre support—To assemble

1. Ensure that all parts are clean. Lightly lubricate with clean transmission fluid all bushes, journals, gears, bearings and sprag races.
2. Fit the rear internal gear onto the mainshaft, circlip groove end; fit the circlip.
3. Fit the races and thrust bearing onto the inner face of the rear internal gear, retaining them with a smear of petroleum jelly.
4. Fit the large diameter race first with the flange uppermost (*see Fig. T276*).
5. Fit the thrust bearing into the race.
6. Fit the smaller diameter race over the bearing with the inner flange toward the bearing.
7. Ensure that the pinion gears are adequately lubricated then fit the output carrier onto the mainshaft so that the pinion gears mesh with the rear internal gear.
8. Fit the assembly into the rear unit holding fixture RH 7959 (J-6116) with the mainshaft pointing downward. Take care not to damage the shaft.
9. Fit the races and thrust bearing onto the outer face of the rear internal gear, retaining them with a smear of petroleum jelly. The small diameter (flanged I/D) race must be fitted first with the flange uppermost (*see Fig. T277*).
10. Fit the thrust bearing into the race.

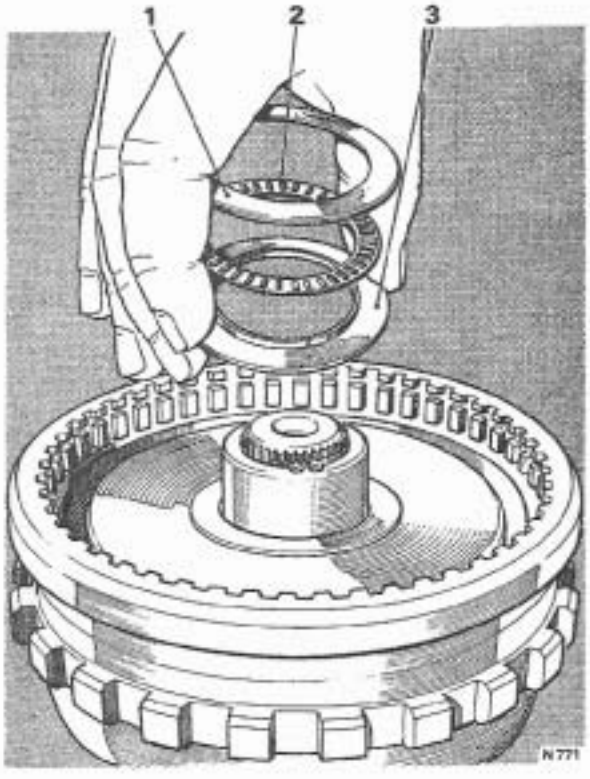

FIG. T277 FITTING RACES AND THRUST BEARINGS TO OUTER FACE OF REAR INTERNAL GEAR

1 O/D flanged race
2 Thrust bearing
3 I/D flanged race

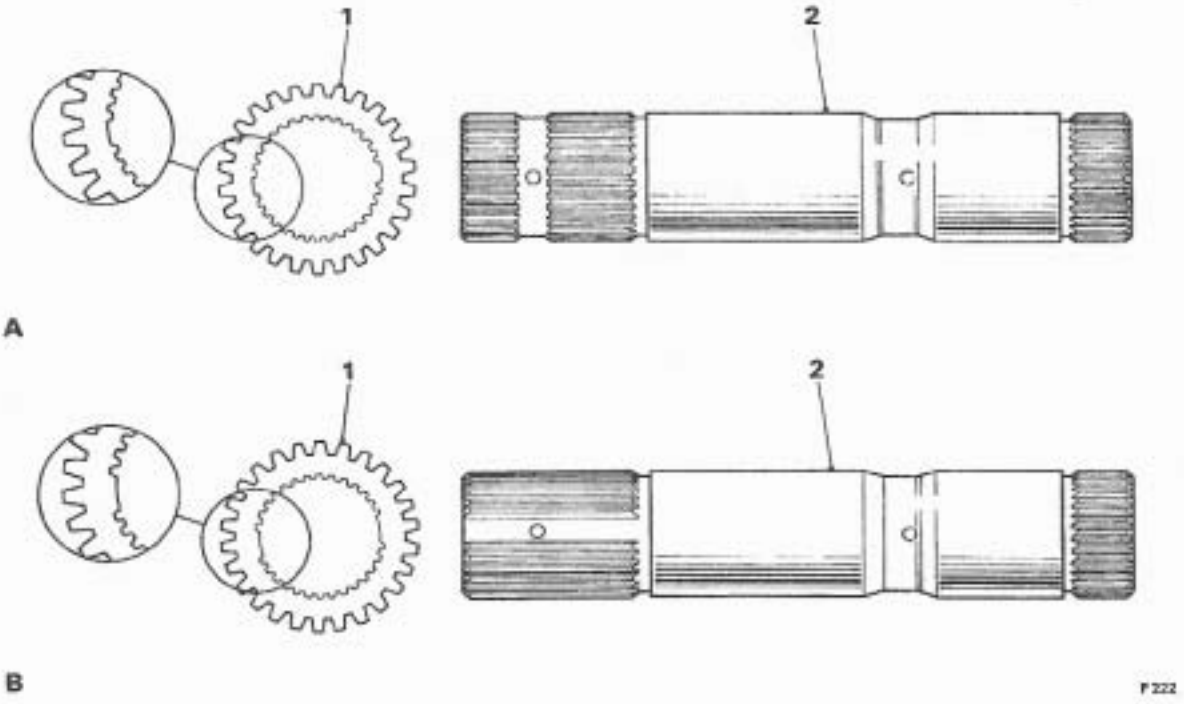

FIG. T278 IDENTIFICATION OF SUN GEAR AND SHAFT

A Later design
B Earlier design
1 Sun gear
2 Sun gear shaft

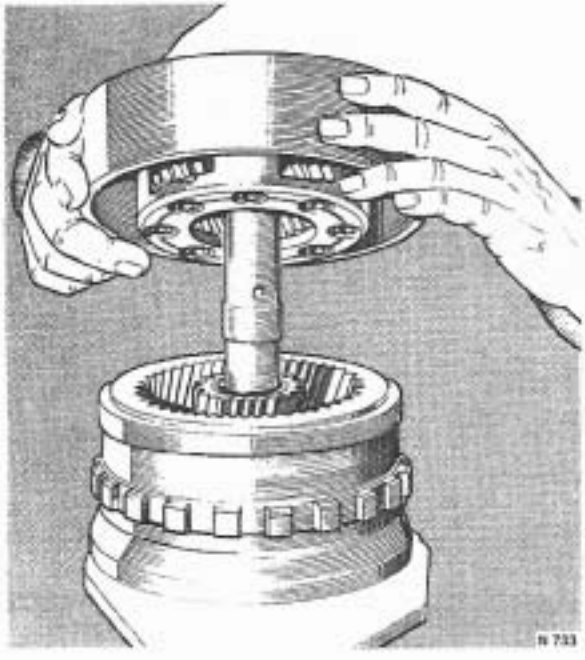

FIG. T281 FITTING THE REACTION CARRIER TO THE OUTPUT CARRIER

11. Fit the large diameter (flanged O/D) race against the bearing with the flange cup over the bearing.
12. Fit the output shaft into the output carrier and fit the snap ring with the chamfer uppermost.
13. Fit a new 'O' ring to the output shaft.
14. Invert the assembly in the holding fixture so that the output shaft points downward.
15. Smear the tab side of the thrust washer with petroleum jelly then fit the washer into the output carrier so that the bent tabs engage in the tab pockets.
16. Fit the sun gear (*see Fig. T278*); ensure that the end with the chamfered inside diameter faces down.
17. Fit the sun gear shaft (*see Fig. T278*) with the longer of the splined ends lowermost.
18. A new design of sun gear and shaft was introduced on **Transmission Serial Number RR-71-1287** and onwards (*see Fig. T278 for identification*). The old sun gear will only fit onto the old shaft but the new sun gear will fit either the new or old shaft. (refer to the latest applicable service literature).
19. Fit the ring over the output carrier.
20. Ensure that the reaction carrier pinion gears are adequately lubricated then fit the reaction carrier onto the output carrier as shown in Figure T279; mesh the pinion gears with the front internal gear.

Printed in Great Britain
September 1971
T.S.D. 2476

Note When a new output carrier and/or reaction carrier is being installed and the front internal gear ring prevents assembly of the carriers, replace the front internal gear ring with the service ring.

The front internal gear ring is a selective fit at the factory but not in service.

21. Fit the large diameter (flanged O/D) race onto the sun gear with the flange facing against the sun gear shaft.
22. Fit the thrust bearing onto the race.

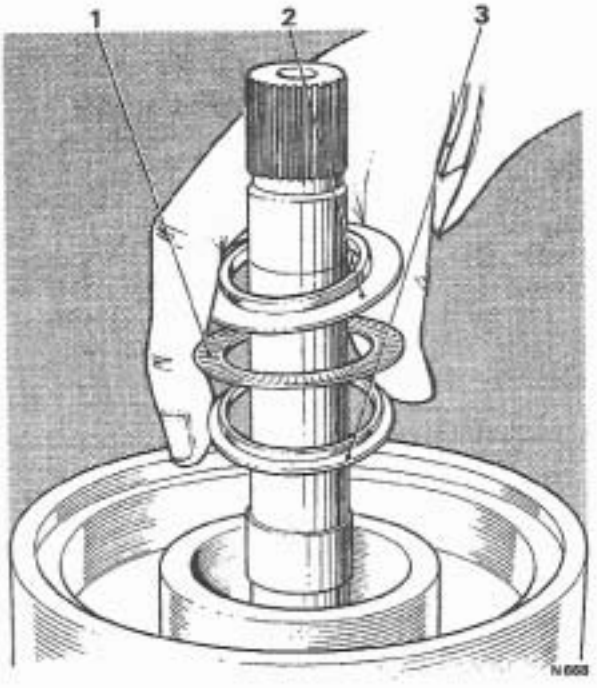

FIG. T282 FITTING RACES AND THRUST BEARINGS TO SUN GEAR

1 Thrust bearing
2 I/D flanged race
3 I/D flanged race

23. Smear the small diameter race with petroleum jelly then fit the race onto the centre support with the flange as shown in Figure T280.
24. Smear the bronze thrust washer with petroleum jelly then fit the washer into the recess in the centre support.

Transmissions with a sprag clutch

25. Using the rear sprag fitting tool RH 7971 (J–21367), fit the rear sprag assembly onto the centre support inner race with the bronze drag strip uppermost (*see Fig. T281*).

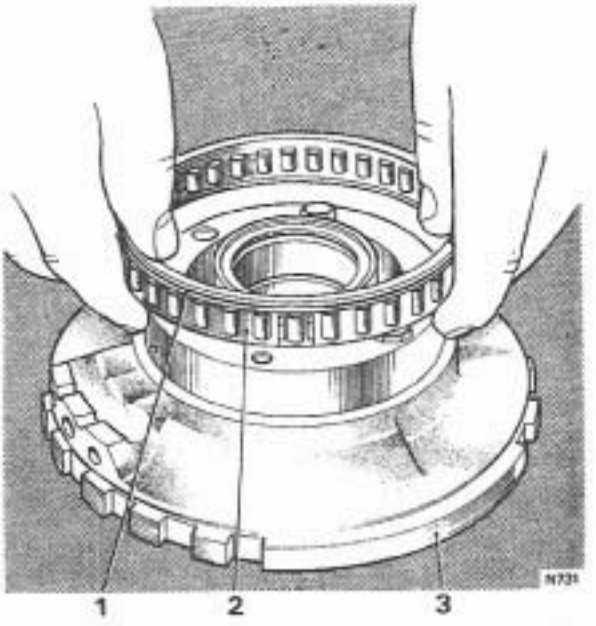

FIG. T281 FITTING THE REAR SPRAG TO THE CENTRE SUPPORT (SPRAG CLUTCH)

1 Sprag ridge uppermost
2 Sprag assembly
3 Centre support assembly

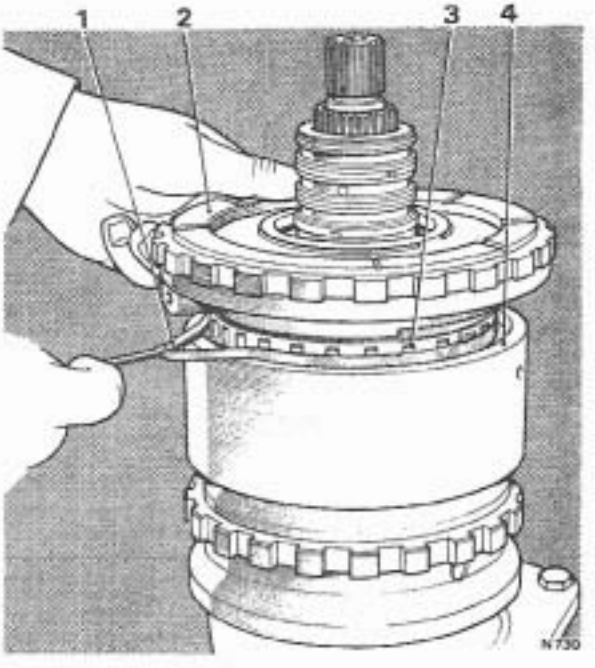

FIG. T282 FITTING THE CENTRE SUPPORT TO THE REACTION CARRIER (SPRAG CLUTCH)

1 Rubber band
2 Central support
3 Sprag
4 Reaction carrier

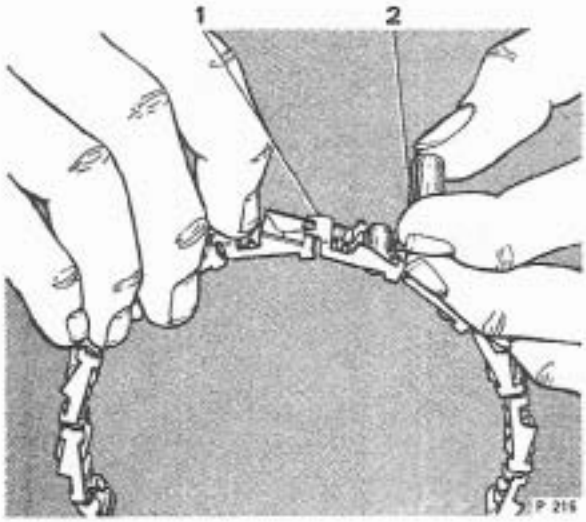

FIG. T283 FITTING A ROLLER TO THE ROLLER CLUTCH CAGE (ROLLER CLUTCH)

1 Cage
2 Roller

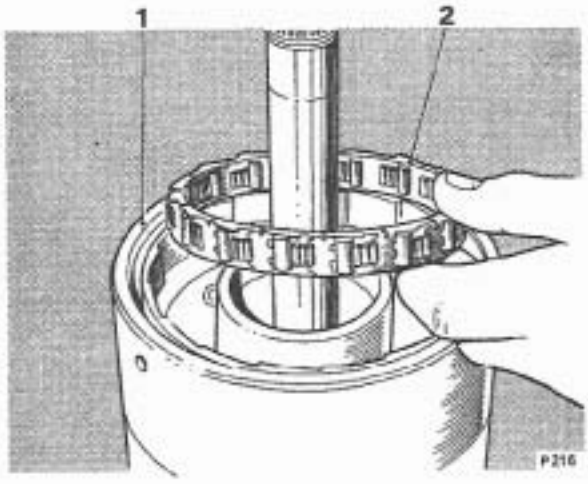

FIG. T284 FITTING THE ROLLER CLUTCH ASSEMBLY TO THE REACTION CARRIER (ROLLER CLUTCH)

1 Reaction carrier
2 Roller clutch assembly

Note The rear sprag fitting tool **must** be used to prevent hidden damage to the soft, bronze drag strips.

26. Fit the centre support and sprag assembly into the sprag outer race in the reaction carrier as follows.

27. Fit a strong rubber band around the outside diameter of the sprag assembly to hold the sprags in place.

28. Start the sprag assembly into the outer race, ensuring that all the sprags are inside the outer race. When this is done, cut or stretch the rubber band to remove it (*see Fig. T282*) then complete the procedure by pressing on the centre support.

Note With the reaction carrier held, the centre support should turn **anti-clockwise only.**

Transmissions with a roller clutch

29. Fit the rollers that may have come out of the roller clutch cage, by compressing the energising spring with the forefinger and inserting the roller from the outside (*see Fig. T283*).

Note Ensure that the energising springs are not distorted and that the curved end leaf of the springs are positioned against the rollers.

30. Fit the roller clutch assembly into the reaction carrier (*see Fig. T284*).

31. Fit the centre support assembly into the roller clutch fitted into the reaction carrier (*see Fig. T285*).

Note With the reaction carrier held, the centre support should turn **anti-clockwise only.**

All Transmissions

32. Fit the tool RH 7970 (J–21365) onto the end of the mainshaft so that the tangs engage the groove in the shaft.

33. Tighten the screw on the tool to secure the tool on the shaft and to prevent movement of the clutch assembly when the gear unit assembly is fitted.

34. Remove the gear unit from the holding fixture and lay it on its side.

35. Fit the thrust washer on the rear face of the output shaft with the bent tabs in the tab pockets. Retain the thrust washer with a smear of petroleum jelly.

Intermediate clutch gear unit, centre support and reaction carrier—To fit

1. Fit the rear band assembly into the transmission case so that the band lugs engage with the anchor pins (*see Fig. T286*).

2. Inspect the support to case spacer for burrs or raised edges, remove with a stone or fine emery cloth. Ensure that the spacer is clean.

3. Fit the support to case spacer against the shoulder at the bottom of the case splines and the gap located adjacent to the band anchor pin (*see Fig. T287*).

Printed in Great Britain
September 1971
T.S.D. 2476

Note Do not confuse this spacer [0·040 in. (1,016 mm.) thick and with both sides flat] with either the centre support to case snap ring (one side bevelled) or the backing plate to case snap ring [0·093 in. (2,362 mm.) thick with both sides flat].

4. Fit the previously selected rear unit adjusting washer (*see 'Rear unit end float — To check', in Section T21*) into the slots provided inside the rear of the transmission case; retain the washer with a smear of petroleum jelly.

5. Fit the transmission case into the holding fixture (if it has been removed). Do not over-tighten the fixture side pivot pin as this will cause binding when the gear unit is fitted.

6. Fit over the output shaft the same length of tube that was used to remove the unit. It can then be used as a handle to facilitate the fitting of the assembled gear unit. It will also prevent the output shaft splines from damaging the bush in the case.

Caution Do not drop or bump the assembly in the transmission case during the fitting procedure. This could result in damage to the output shaft case bush as well as to the assembly itself.

7. Fit the gear unit with the centre support and the reaction carrier. Align the slots then carefully guide the assembly horizontally into the transmission case making certain that the centre support bolt hole is properly aligned with the hole in the case.

8. Position the transmission vertically with the front end of the case uppermost. Remove tool RH 7970 (J–21365).

9. Lubricate the centre support retaining snap ring with clean transmission fluid then fit the snap ring into the transmission case with the bevelled side uppermost and the flat side against the centre support; position the gap adjacent to the front band anchor pin.

10. Expand the snap ring until the centre support is against the shoulder of the case

11. Fit the case to centre support bolt.

Note To correct carry out this operation, it will be necessary to produce a locating tool and then to proceed as follows.

12. Produce the locating tool from 0·375 in. (0,95 cm.) diameter, cold roll steel or from a screwdriver with a 0·375 in. (0,95 cm.) diameter shank. The stock should be approximately 12·00 in. (30,5 cm.) long. Grind the stock to a blunt point, tapering it 0·875 in. (2,22 cm.) from the end of the bar to a 0·125 in. (0,32 cm.) diameter at the end.

13. Bend the bar to a 45° angle 2·50 in. (6,35 cm.) from the pointed end (*see Fig. T288*).

14. Place the centre support locating tool into the direct clutch passage in the case, with the handle of the tool pointing to the right as viewed from the front of

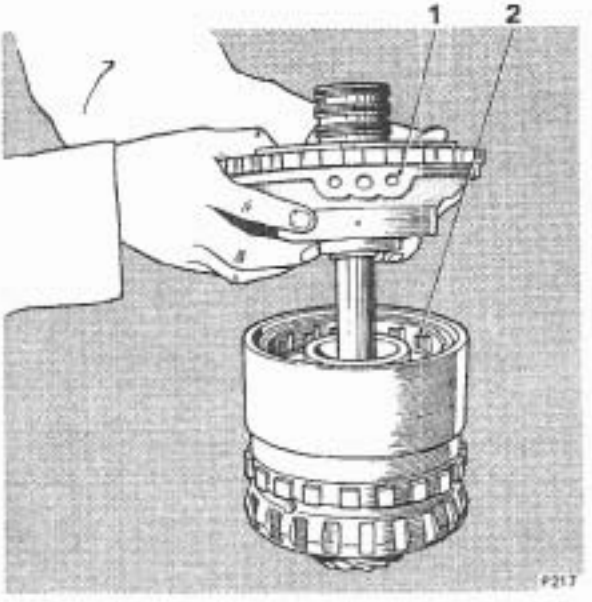

FIG. T285 FITTING THE CENTRE SUPPORT INTO THE REACTION CARRIER (ROLLER CLUTCH)

1 Centre support
2 Roller clutch

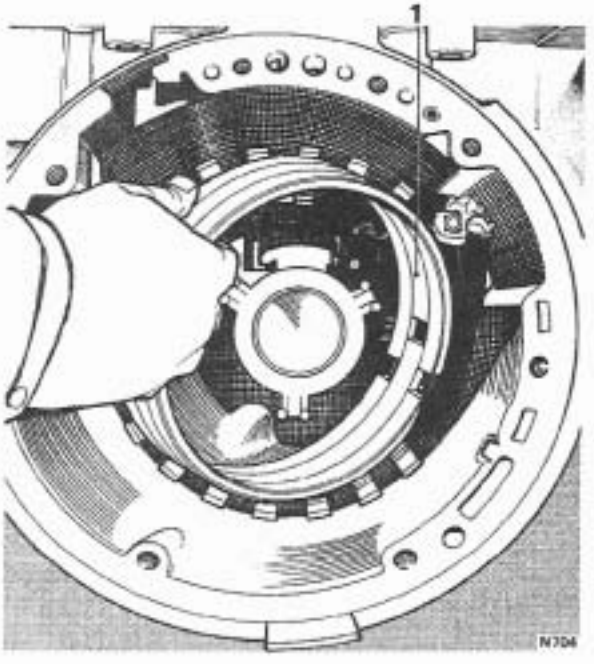

FIG. T286 FITTING THE REAR BAND

1 Rear band

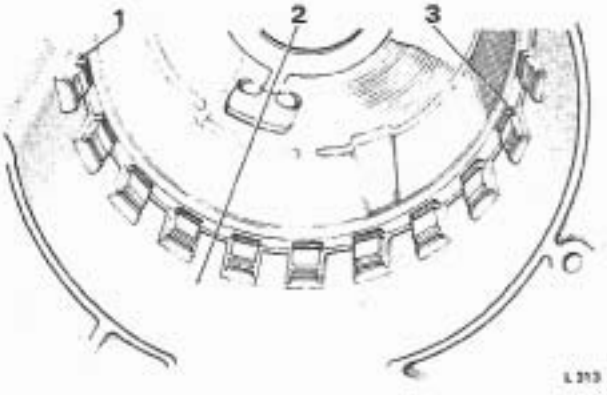

FIG. T287 FITTING THE INTERMEDIATE CLUTCH PLATES

1 Steel plate (3)
2 Composition plate
3 Back plate

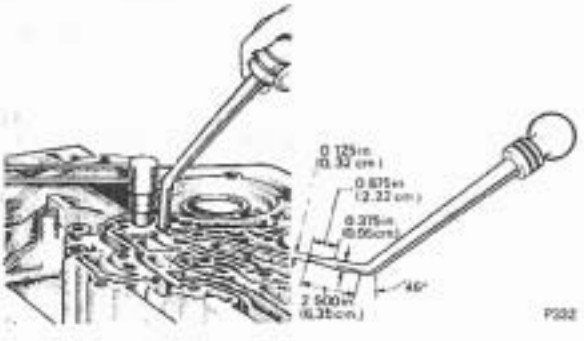

FIG. T288 LOCATING CENTRE SUPPORT

the transmission and parallel to the bell housing mounting face.

15. Apply pressure downward on the tool handle which will tend to rotate the centre support anti-clockwise as viewed from the front of the transmission.

16. While holding the centre support firmly anti-clockwise against the case splines, torque the case to centre support bolt to 23 lbs. ft. (3,2 kg.m.).

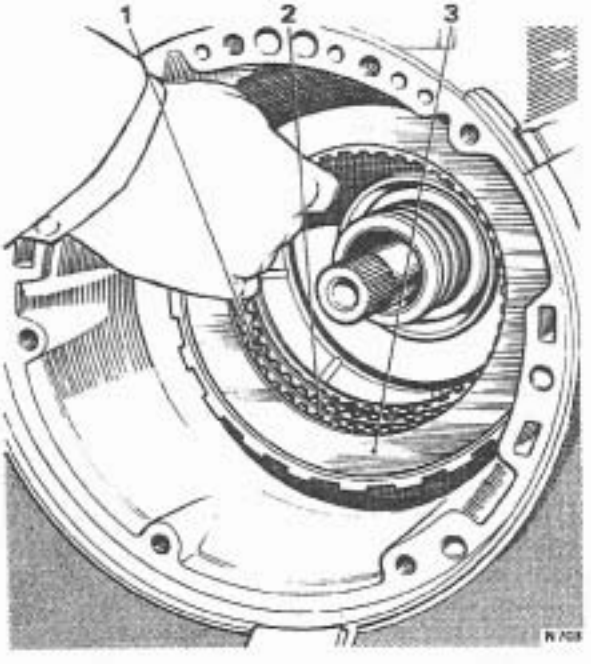

FIG. T289 FITTING THE INTERMEDIATE CLUTCH PLATES

1 Steel plate
2 Composition plate
3 Back plate

Note When using the locating tool, take care not to raise burrs on the case valve body mounting face.

17. Lubricate the three steel and three composition clutch plates with clean transmission fluid then fit the clutch plates. Commence with a steel plate then fit alternate composition and steel plates, finishing with a composition plate (*see Fig. T289*).

18. Fit the intermediate clutch back plate with the machined face against the clutch plate.

19. Fit the large snap ring, ensuring that the ring gap faces the opposite side to the front band anchor pin.

20. Check the rear unit end float.

Printed in Great Britain
September 1971
T.S.D. 2476

Section T23
TRANSMISSION CASE

The transmission case is an alloy die casting comprising the housing for the main transmission components. It also forms the bell housing which encloses the torque converter.

The lower inner face of the case forms part of the hydraulic passages onto which the control valve unit fits. A bore in the rear of the case contains a bush in which the output shaft runs. A machined face at the front of the case accepts the oil pump and contains oil passages which convey transmission fluid from the pump to several points in the case.

Transmission case—To inspect

1. When the transmission has been completely dismantled, the case should be thoroughly washed in clean paraffin (kerosene) then dried with compressed air.
2. Ensure that all the oil passages are flushed out.
3. Take care not to raise burrs on the ends of the passages.

Note If the case assembly requires replacement and contains the centre support which has the centre support to case spacer fitted, ensure the spacer is removed from the old case and installed in the new case.

External leaks

Determine the exact source of the leak and use the approved epoxy repair procedure for minor porosity.

Internal leaks

1. Inspect the case assembly for internal porosity or cross channel leaks in the valve body face passages.

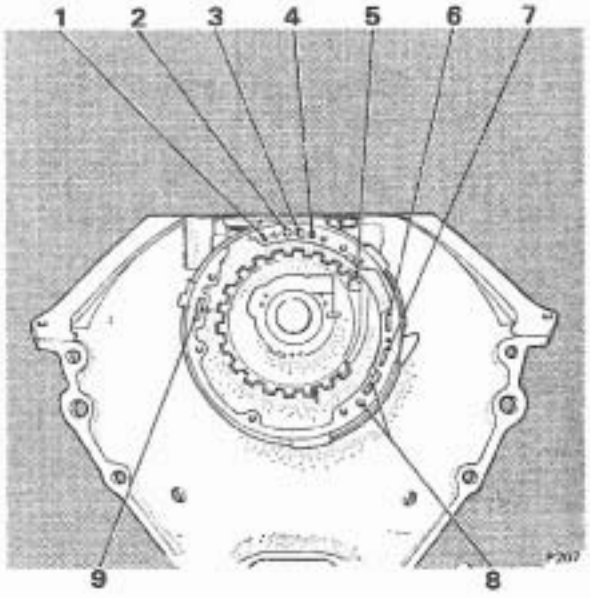

FIG. T290 TRANSMISSION CASE OIL PASSAGES

1 Reverse
2 Line
3 Drive
4 Modulator or Intermediate
5 Intermediate clutch cup plug
6 To cooler
7 Cooler return
8 Vent
9 Pump intake

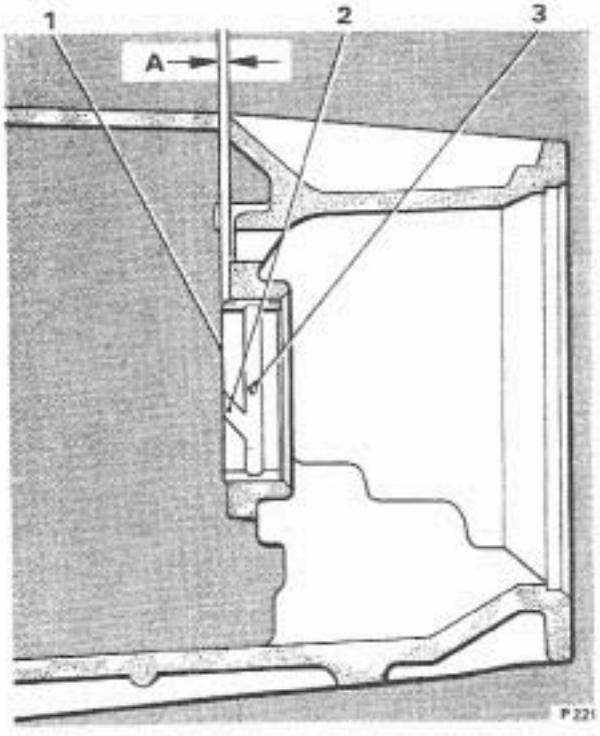

FIG. T291 FITTING A NEW CASE BUSH

1 Bush (GM 8623941)
2 Stake mark
3 Bush to be fitted with oil groove in direction shown
A 0.040 in. to 0.055 in. (1,016 mm. to 1,307 mm.)

2. Inspect for porosity or defects in the modulator valve bore, case intake bore and pump case face.

3. If internal leakage is confirmed from any of the foregoing points, fit a new case.

4. During internal inspection of the case also check for a loose or missing intermediate clutch cup plug, for identification refer to Figure T290; if necessary, fit a new plug.

External damage

External damage is usually caused by handling, road hazards or converter to flex-plate bolts becoming loose as a result of incorrect fitting. When external damage is evident such as described in the foregoing sentence, fit a new case.

Internal damage

If the internal damage is due to the incorrect installation of the spacer and/or the snap rings resulting in damage to the snap ring grooves, fit a new case and ensure that the snap rings are assembled in their correct location.

High oil pressure can also result in internal damage, if this is the cause fit a new case and rectify the problem (usually the trouble can be located in the pressure regulator valve system).

Internal inspection of the case may also reveal that fretting or peening on the shoulder at the bottom of the case splines has taken place; if this condition is any more than the very slightest, fit a Centre Support Service Package. Changing the transmission for this condition is not usually considered necessary.

If the case bushing is found to be worn or scored fit new bushing (*see Fig. T291*).

Inspect the case for stripped threads in the bolt holes and where possible 'Heli-Coil' the damaged bolt hole(s) (*see Fig. T292 and 'Heli-Coil' Information Chart*).

Repair procedure for minor case porosity

1. Proceed with the repair by bringing the transmission fluid up to the operating temperature 82°C. (180°F.).

2. Locate the source of the oil leak.

3. Thoroughly clean the area to be repaired with cleaning solvent and a brush; dry-off with compressed air. A clean, dry soldering acid brush may be used to clean the area and also apply the epoxy cement.

4. Following the manufacturer's instructions, mix a sufficient amount of epoxy cement, such as 3 M — Scotch Weld — 2216 or equivalent, to carry out the necessary repair.

Note Observe the manufacturer's cautions in handling.

5. While the transmission is still at operating temperature, apply epoxy cement to the area under repair. Ensure that the area is completely covered.

6. If 3M — Scotch Weld — 2216 has been used allow 1 hour to pass before starting the engine; equivalent epoxy cements may take longer to cure, always check the manufacturer's instructions.

7. Finally, bring the transmission fluid up to the normal operating temperature of 82°C. (180°F.) and check the transmission for leaks.

Intermediate clutch plug—To fit

1. Place the transmission case in the holding fixture and position with the front end facing up.

2. Ensure that the intermediate clutch cup plug hole is thoroughly clean and enter the intermediate clutch cup plug into the hole open end out. Drive the plug into the case until it is flush or slightly below the top of the hole using a 0·375 in. (9,525 mm.) diameter rod 10·00 in. (25,40 cm.) long.

Note Ensure that the rod used is large enough to locate on the lip edge of the plug and **not** the bottom of the plug.

3. Stake the plug securely in the case.

Case bushing—To remove

1. To remove the case bushing, support the case and using tool J-21465-8 with driver handle J-8092 (or J-8400-1) remove the bush.

Printed in Great Britain
September 1971
T.S.D. 2476

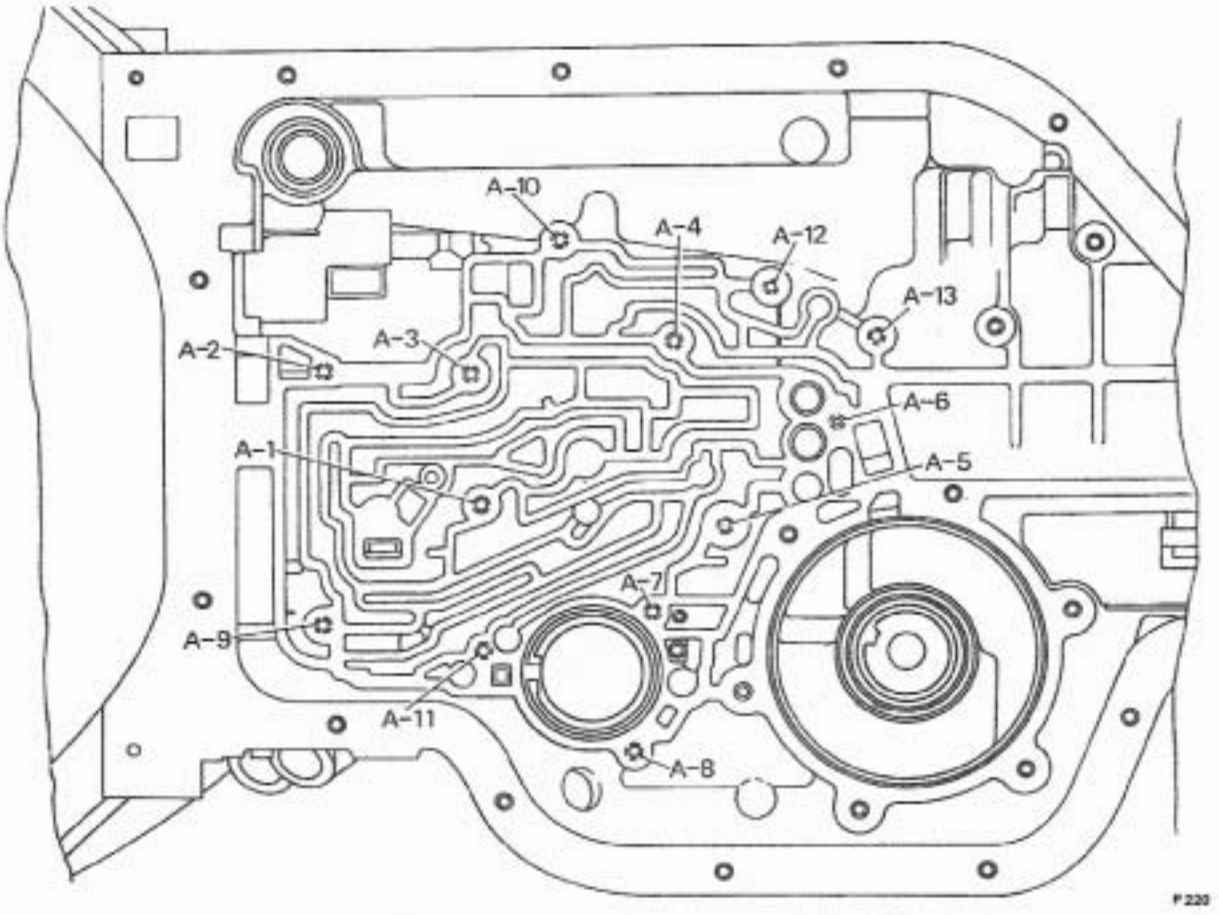

FIG. T292 HELI-COIL IDENTIFICATION—VIEW OF UNDERSIDE OF TRANSMISSION CASE

Case bushing—To fit

1. Support the transmission case and using tool J-21465-9, drive handle J-8092 and extension J-21465-13. Press or drive the bush into the case until 0·040 in. (1,016 mm.) to 0·055 in. (1,307 mm.) **above** the selective thrust washer-face (*see Fig. T291*).

Note Ensure that the bushing is fitted with the lubrication passage facing the front of the transmission case.

2. Stake the bushing with tool J-21465-0.

3. The stake marks to be inside the lubrication grooves.

Heli-Coils

Before commencing these operations always refer to Figure T292 and the 'Heli-Coil' Information Chart, for correct drill and tap sizes.

1. Shield the area around the hole to be heli-coiled, this will contain any small particles of metal.

2. Drill out the old threads and clean any particles from the hole.

Note Drill out only to the depth of the original hole. When drilling hole A-4 (*see Fig. T292*), the drill may go through to the inside of the case; located just behind this hole are the intermediate clutch splines. If the hole goes through, the burrs **must** be removed from the clutch splines.

3. Tap the hole with the **heli-coil tap.**

4. Fit the standard insert (STI) heli-coil.

5. Remove the shields and **ensure that all particles of metal, etc. are removed.**

Heli-Coil Information for Torque Converter Transmission

Transmission Out of Vehicle and Partially or Completely Dismantled.

Location	Hole No.	Drill size	Tap size	Heli-Coil size
Pump to Case	All	0.328 in. (8,334 mm.)	5/16–18 UNC–2B	5/16–18 STI-NC
Valve Body to Case	A–1 through A–4 (*See Fig. T292*)	0.328 in. (8,334 mm.)	5/16–18 UNC–2B	5/16–18 STI-NC
Valve Body to Case	A–5 and A–6 (*See Fig. T292*)	0.266 in. (6,747 mm.)	1/4–20 UNC–2B	1/4–20 STI-NC
Converter To Flex-Plate	All	0,391 in. (9,922 mm.)	3/8–16 UNC–2B	3/8–16 STI-NC

Transmission in Vehicle and Partially Dismantled.

Location	Hole No.	Drill size	Tap size	Heli-Coil size
Case Extension to Case	All	0.391 in. (9,922 mm.)	3/8–16 UNC–2B	3/8–16 STI-NC
Governor Cover to Case	All	0.328 in. (8,334 mm.)	5/16–18 UNC–2B	5/16–18 STI-NC
Modulator Retainer to Case	—	0.328 in. (8,334 mm.)	5/16–18 UNC–2B	5/16–18 STI-NC

Location	Hole No.	Drill size	Tap size	Heli-Coil size
Speedometer Driven Gear Assembly to Case	—	0.328 in. (8,334 mm.)	5/16–18 UNC–2B	5/16–18 STI-NC
Oil Pan to Case	All	0.328 in. (8,334 mm.)	5/16–18 UNC–2B	5/16–18 STI-NC
Rear Servo Cover to Case	All	0.328 in. (8,334 mm.)	5/16–18 UNC–2B	5/16–18 STI-NC
Parking Brake Bracket to Case	All	0.328 in. (8,334 mm.)	5/16–18 UNC–2B	5/16–18 STI-NC
Valve Body to Case	A–7 through A–10 (*See Fig. T292*)	0.328 in. (8,334 mm.)	5/16–18 UNC–2B	5/16–18 STI-NC
Valve Body to Case	A–11 (*See Fig. T292*)	0.266 in. (6,747 mm.)	1/4–20 UNC–2B	1/4–20 STI-NC
Solenoid to Case	A–12 and A–13 (*See Fig. T292*)	0.266 in. (6,747 mm.)	1/4–20 UNC–2B	1/4–20 STI-NC

Printed in Great Britain
September 1971
T.S.D. 2476

Section T24
WORKSHOP TOOLS

The following is a list of special tools to be used when servicing the Automatic Transmission. General tools are not included as it is felt that these will be available locally.

Tool Number	*Description*	
RH 7949 (J–21409)	Forward and direct clutch piston fitting tool.	This tool enables the forward and direct clutch piston outer seal to enter the clutch drum easily and without damage to the seal.
J–21427	Speedometer drive gear removal tool.	This tool, when used in conjunction with J–21797 and J–8433 enables the speedometer driving gear to be removed from the output shaft.
J–21797	Speedometer drive gear removal bolt (2 off).	See previous description.
RH 7791 (J–8433)	Pulley extractor.	See previous description.
RH 7962 (J–21795)	Gear assembly removal and fitting adapter.	This tool must be used whenever the gear assembly is removed or fitted. It fits onto the end of the mainshaft and when the centre screw is tightened, prevents the rear sprag from moving.
RH 7955 (J–8763)	Transmission holding fixture.	This fixture accepts the transmission case and, when used in conjunction with base RH 7956 (J–3289–20), enables the transmission to be dismantled and assembled at a workable height and in the most convenient position.
RH 7956 (J–3289–20)	Base — holding fixture.	See previous description.
RH 7954 (J–21359)	Pump oil seal inserting tool.	This tool facilitates the fitting of the oil pump seal with the pump either fitted to or removed from the transmission.
J–21368	Pump body and cover alignment band.	This band ensures accurate alignment between the pump cover and the body whilst the securing setscrews are tightened.
RH 7969 (J–21363)	Intermediate clutch inner seal protector.	The seal protector fits over the centre support hub and ensures that the intermediate clutch piston inner seal is not damaged as the piston is fitted.

Workshop Tools — continued

Tool Number	*Description*	
RH 7964 (J–21360)	Pump by-pass valve seat fitting tool.	This tool is a punch which should be used when fitting a new by-pass valve seat.
RH 7957 (J–21370)	Band apply pin selector gauge (use J–21370–5 pin).	This gauge must be used, in conjunction with pin J–21370–5, to select the correct band apply pin in the rear servo.
RH 7971 (J–21367)	Rear sprag fitting tool.	This tool fits over the hub of the centre support and abuts the sprag inner race. The tool must be used when fitting the sprag to guard against damage to the soft bronze drag strips on the sprag itself.
RH 7952 (J–21366)	Converter retaining clamp.	This is a clamp which bolts onto the front face of the transmission case and prevents the torque converter from moving whilst the transmission is being handled.
RH 7968 (J–21362)	Forward and direct clutch inner seal protector.	This tool fits over the hub of the forward clutch and the direct clutch and protects the piston inner seal whilst the piston is being fitted.
RH 7963 (J–21361)	Pump by-pass valve seat remover.	When used in conjunction with slide hammer RH 7958 (J–6125), this tool will extract the by-pass valve seat from the oil pump.
RH 7966 (J–21664)	Clutch spring compressor adapter.	This adapter, when used in conjunction with RH 7965 (J–4670) — clutch spring compressor — facilitates the compressing of both the forward and direct clutch springs. The tool should be used when removing or fitting the clutch spring retainer snap ring.
RH 7965 (J–4670)	Clutch spring compressor.	See previous description.
RH 7674	Circlip and snap ring pliers.	By utilising the various nose pieces this tool can be used for the removal and fitting of the various circlip and snap rings in the transmission and electric actuator.
RH 7961 (J–21885)	Control valve accumulator piston fitting tool.	This tool is in the form of a clamp and facilitates the fitting of the accumulator spring and piston.
RH 7954 (J–21369)	Converter leak test fixture.	This fixture can be fitted to the neck of the torque converter and, when air pressure is applied to the valve, enables the converter to be pressure tested to check for leaks.
RH 7958 (J–6125)	Slide hammer assemblies.	The slide hammers have various uses when overhauling the transmission and are recommended when removing the oil pump.
RH 7950 (J–5154)	Rear extension oil seal fitting tool.	This tool should be used to fit a new oil seal to the rear extension. It can be used to fit a seal when the transmission is fitted to the car.
RH 7960 (J–21364)	Rear unit holding fixture adapter.	This adapter, when used in conjunction with rear unit holding fixture J–6116 will hold the rear unit whilst it is being dismantled or assembled.
RH 7959 (J–6116)	Rear unit holding fixture.	See previous description.
R 5244	Oil pressure gauge.	When coupled to the transmission main line oil feed, the gauge enables the oil pressure to be checked with the car either stationary or moving during a road test.
RH 7967 (J–6129)	Rear clutch spring compressor.	When used in conjunction with tools J–4670 — compressor and J–21664 — adapter the tool will facilitate the removal and fitting of the direct clutch housing snap ring.
RH 7841	Roll pin insertion and extraction tool.	The roll pin can be easily fitted to and removed from the brake drum and worm shaft with the aid of this tool.
RH 7843	Compressor — actuating lever spring.	This tool fits onto the electric gearchange actuator and will compress the actuating lever spring to facilitate removal of the retaining pin.
RH 7914	Adapter — main line oil pressure tapping to gauge.	The adapter screws into the main line blanking plug orifice in the left-hand side of the transmission and accepts the oil pressure gauge pipe (use with R 5244).

Workshop Tools — continued

Tool Number		
R 5280	Adapter — air checking.	Rubber-nosed adapter for use when air testing.
RH 7951 (J-21477)	Wrench — oil cooler pipe.	This wrench is used in conjunction with a ratchet spanner (slackening) or torque spanner (tightening).
RH 7970 (J-21365)	Retainer — rear sprag.	This tool is fitted to the mainshaft to prevent movement of the rear sprag when the gear unit assembly is fitted.
J-21465-8	Removal fitting tool — case bush.	This tool with J-8092 is for removing and fitting the transmission case bushing.
RH 7794 (J-8092)	Universal handle.	See previous description.
J-21465-9	Adapter ring — case bush.	Used for fitting the new case bushing.
J-21465-10	Staking tool — case bush.	Used for staking bushing in transmission casing.
J-21465-13	Extension — case bush.	Used for fitting the new case bushing.

Printed in Great Britain
September 1971
T.S.D. 2476