GEARBOX

SECTION G.

GEARBOX.

INDEX TO SUB-SECTIONS.

	SUB-SECTION
GEARBOX - RIGHT-HAND GATE CHANGE General - Service Faults - To Dismantle the ... ... Gearbox - To Dismantle the 3rd Motion Shaft Assembly - To Re-assemble the 3rd Motion Shaft - Front End Cover - To Fit a New Third Motion Shaft Having Strengthened Splines - To Re-assemble the Gearbox - Side Change ... Gear Mechanism - To Remove, Dismantle and Clean the Side Change Gear Mechanism - To Remove the Selector Shafts - To Refit the Selector Shafts.	BG-1

SECTION G.

INDEX TO ILLUSTRATIONS.

TITLE.	FIG. NO.
Change Gear Gate - Plan View	14
First Motion Shaft - Exploded View	2
First & Second Speed Operating Lever & Reverse Actuating Lever ... (Assemblies - Section	9
Gearbox - "Cut-away" View.	1
Internal Selector Mechanism - Exploded View.	8a
Locating Piece - Servo Drive Shaft	5
Reverse Actuating Lever - Correct position in Relation to Jaw ...	10
Reverse Motion Shaft - Exploded View.	7
Second Motion Shaft - Exploded View.	6
Second Motion Shaft - Positioning of rear Washer	12
Selector Jaw - Method of Locking	16
Selector Lever - Correct Position of End in Relation to Jaw ...	13
Selector Shafts - Section.	17
Side Change Gear Mechanism - Exploded View.	15a
Side Change Gear Mechanism - Section.	15
Sliding Piece - Rear End View.	8
Third & Fourth Speed Operating Lever Assembly - Section ...	11
Third Motion Shaft (Early Type) - Exploded View.	4
Third Motion Shaft (Early Type) - Section.	3
Tie-Rod - Engine Fore & Aft Location.	14a

THE GEARBOX

(RIGHT HAND GATE CHANGE)

GENERAL:

Four forward speeds and reverse with positive interlock selector mechanism. Synchromesh on second, third and fourth, the latter being a direct drive. Right-hand lever or column gear change. Brake servo motor and speedometer drives, and a gear type pump for rear controllable shock dampers are mounted in the gearbox and driven from the 3rd motion shaft.

GEAR RATIO: (OVERALL)

1st speed 11.11:1 2nd speed 7.52:1 3rd speed 5.00:1

4th speed (direct) 3.73:1, Reverse 11.76:1 (Rear axle ratio 3.73:1)

NOTE: Retailers in the British Isles are advised that gearboxes requiring major repairs should be returned to the London Service Station.

The removal of the gearbox and servo motor is fully described in Section F, Sub-section BF-3 and Section J, Sub-section BJ-5 respectively.

Should difficulty have been experienced in removing the gearbox, which may have been due to the journal at the front end of the 1st motion shaft being too close a fit in the bore of the inner race of the spigot bearing fitted to the flywheel, clean the journal and measure the diameter, and should this exceed .8745" (22.212 m/m), then reduce it to this figure by polishing with emery cloth. The inner race of the spigot bearing should also be checked that it rotates freely. If it is found to be stiff or rough, apply a few drops of oil. If there is no improvement, a new bearing should be fitted. This will necessitate the removal of the clutch, the removal and refitting of the clutch is fully described in Section F, Sub-section BF-3. Removing and refitting a spigot bearing is described under Sub-paragraph 1b on page 4, of Service Bulletin No: BB-32 (Section F.)

1. SERVICE FAULTS: Possible Causes and Remedies:

Difficulty in Changing Gear:

(i) Cause: It will be found that this is frequently due to the trapping of a fold of the leather gaiter near the bottom between the change gear lever and the gate, usually preventing the engagement of the second gear.

Remedy: Remove the gaiter. From a piece of upholstery hide or good quality leatherette, cut a suitable strip and reinforce the interior of the lower part of the gaiter, commencing from the flanged edge upwards. Stick the reinforcing strip in position with Bostik or other suitable adhesive.

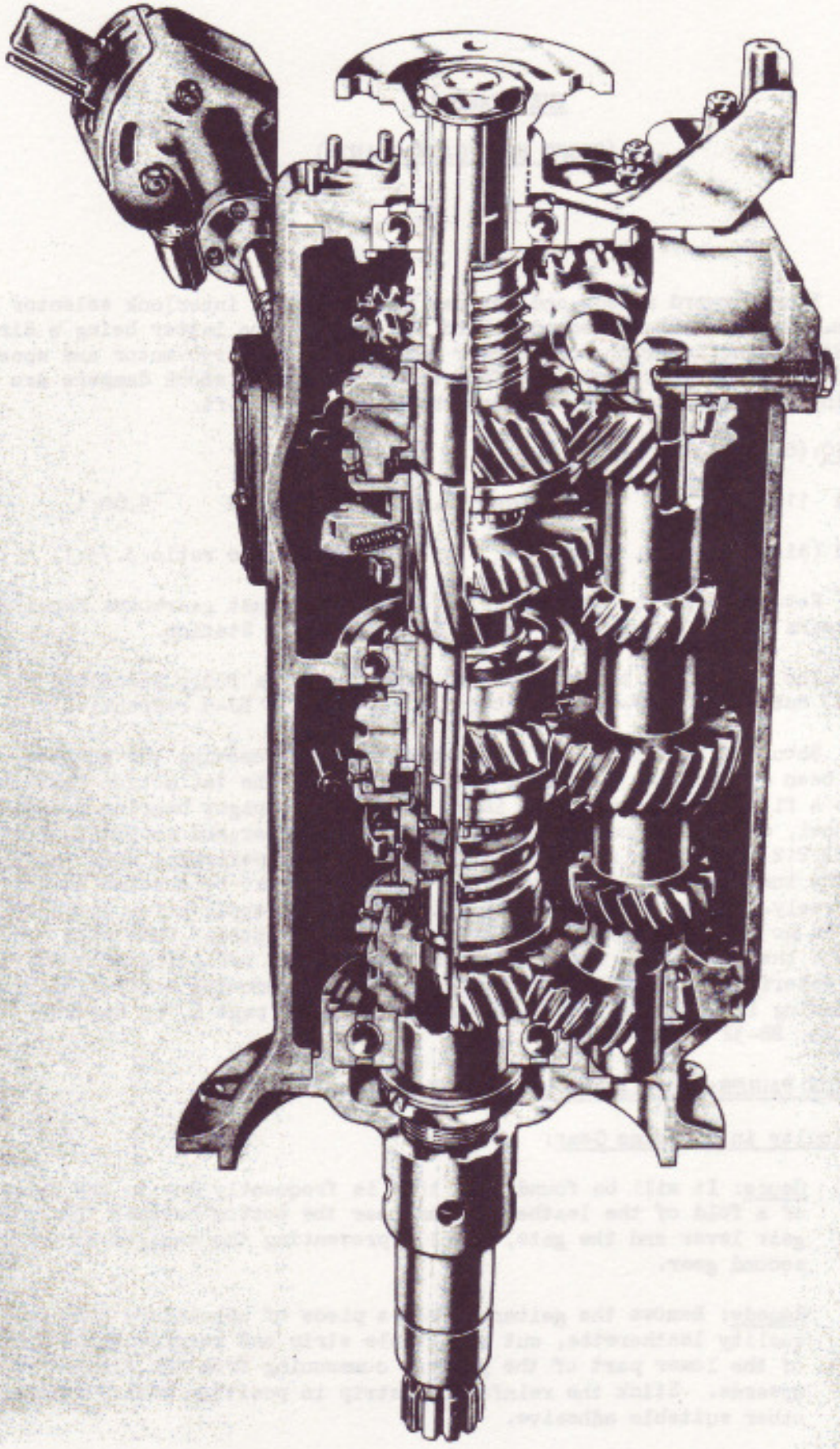

(ii) Cause: Foreign matter in or dryness of the side change gear mechanism causing stiffness when moving the lever through the gate.

Remedy: Take off the gaiter and remove foreign matter (if any) from the interior of the gate and clean and oil the end of the change gear lever shaft. If this does not effect any improvement, it will be necessary to remove the side change gear unit from the chassis and dismantle and clean it as described in paragraph 7A.

(iii) Cause: May be due to the omission of the spring 18, Fig.15, of the side change gear mechanism. The springs 17 and 18 are identical with one another.

Remedy: Fit a second spring (Part No: RG-3335).

(iv) Cause: The rubber stop 20, Fig.15, of the side change gear mechanism too wide, causing the gear change lever to rub hard against the forward or rearward tongue of the gate when sliding into the 3rd or top speed slots in the gate.

Remedy: Remove the rubber stop (See Paragraph 7A) and should the overall width be found to exceed .485" (12.3 m/m), reduce it to this length by carefully cutting the stop on its non radius side or fit a new stop Part No: RG-3332, having the reduced width.

(v) Cause: Adjustment (length) of the tie rod 'W' Fig. 14A, fitted between the rear end of the gearbox and the frame, interfered with and incorrectly set which could cause cross binding of the side change gear mechanism.

Remedy: See "Note" at end of paragraph 7.

(vi) Cause: A synchromesh cone or cones sticking in engagement causing a drag when changing gear.

Remedy: See paragraph 4, sub-paragraph (v) concerning the polishing of the conical portion of the gear/s.

(vii) Cause: Stiffness of the two sliding keys 31, Fig.3, in the grooved splines of early type 3rd motion shaft, causing drag when changing from 3rd to top speed or vice-versa.

Remedy: Ease keys as necessary (See Paragraph 4, sub-paragraph(vi).

(viii) Cause: Failure of one or both of the two grooved keyway splines at the front end of early type 3rd motion shaft (Part No: RG-193), making it difficult or impossible to change from 3rd to top speed or vice-versa.

Remedy: Fit a new 3rd motion shaft with strengthened non-keyway splines and associated parts. (See paragraphs 4 & 5).

Jamming of the Reverse Change Gear Mechanism in the Gearbox:

(ix) Cause : Most probably due to incorrect setting of the bronze reverse actuating lever 9, Fig. 9.

Remedy: See paragraph 6, sub-paragraph (ii). Apart from the instructions given in sub-paragraph (ii), it is an easy matter when a car develops this fault, to free the bronze reverse actuating lever by slackening off the two nuts (beneath the gear box) securing the locking plate of the eccentric pivot pin 7, Fig.9, and rotating the pin half a turn. It should be noted however, that correct reverse gear position can only be obtained when the side cover is removed and should be checked when the car is next serviced.

"Chunking" i.e. Slack noticeable in the Gears between Drive and Overdrive.

(x) Cause: Excessive end float in the 1st and 3rd motion shafts due to the large radius on the outer race of the front ball bearing of the 1st motion shaft and a similar radius on the rear ball bearing of the 3rd motion shaft causing the spring retaining rings to deflect under load.

Remedy: Fit a square edge type ball bearing to the 1st and 3rd motion shafts as described in Paragraph 4, sub-paragraph (iii). These bearings present a larger diameter contact between the outer race and the retaining ring.

(xi) Cause: Too much end float in the 2nd speed driven gear 20, Fig.3, or in the 3rd speed driven gear 26, Fig.3, or both.

Remedy: See paragraph 4, Sub-paragraphs (ix) and (xiii)a, to reduce end float, or if necessary fit new bushes to the gear or gears.

Noise: 1st Speed Gears:

(xii) Cause: Damaged teeth. Most probably due to re-engaging the clutch inadvertently before the change gear lever has been returned all the way to neutral, i.e. before the teeth of the gears are fully disengaged.

Remedy: Trim up the leading edge of the teeth of the gear or gears by stoning if only slightly burred or chipped, or, if too badly damaged, fit a new gear or gears as necessary.

NOTE: If the 1st speed driving gear on the 2nd motion shaft cluster is in poor condition, a new 2nd motion shaft may be necessary which would also entail the fitting of a new 1st motion shaft to ensure silent running of the constant mesh gears, these being mated in pairs.

Noise: 2nd Speed Gears:

(xiii) In the case of a bad whine from the gears, a new 2nd speed driven gear 20, Fig.3, may be necessary. A new 2nd motion shaft cluster 1, Fig.6, may also be needed, but should only be fitted as a last resort as it may affect the silence of the other gears and would necessitate the fitting of a new 1st motion shaft.

Unevenness of gear noise, particularly on the over-run may be the result of wear of the bushes 5, and 21, Fig. 3, which will cause the gear to tilt and result in faulty bedding of the gears. See paragraph 4, Sub-paragraph (ix).

Noise: 3rd Speed Gears:

(xiv) In the case of a bad whine from the gears, a new 3rd speed driven gear 26, Fig. 3, may be necessary. A new 2nd motion shaft cluster 1, Fig.6, may also be needed, but again should only be fitted as a last resort, as it may effect the silence of the other gears, and would necessitate the fitting of a new 1st motion shaft.

Unevenness of gear noise, particularly on the over-run may be the result of wear of the bushes 11 and 28, Fig. 3, which will cause the gear to tilt and result in faulty bedding of the teeth. See paragraph 4, Sub-paragraph (ix).

Noise: Constant Mesh Gears:

(xv) If there is a bad whine from the constant mesh gears, it will be necessary to fit a new mated pair of 1st and 2nd motion shafts.

NOTE: The fitting of a new 2nd motion shaft cluster may affect the silence of the other gears.

2. TO DISMANTLE THE GEARBOX:

Special Tools Required:

Tool No:	No. Off	Title:	Designation:
1641/T1002	1	Ring Spanner.	1st Motion Shaft(only required if the 1st Motion Shaft assembly has to be dismantled).
1641/T1004	1	Box Spanner.	3rd Motion Shaft.
1639/T1008	1	Extractor.	Removing & Refitting 3rd Motion Shaft.
1639/T1009	1	Extractor.	Guide shaft-operating forks.
1639/T1010	1	Extractor.	Locating piece-servo drive.
1639/T1011	1	Extractor.	Bearing shaft-2nd motion shaft) Bearing shaft-Reverse motion) shaft.)
STD.503	1	Key.	Extractors.
STD.504	1	Key.	Box Spanner(1641/T1004).

Should the above tools not be available, alternative methods of removal are given in the appropriate paragraphs. The tools, with the exception of 1641/T1004 and STD.504, are normally supplied to Main Depots only.

(i) Remove the drain plug from the bottom cover and drain the oil.

(ii) Attach the gearbox to a suitable erection stand.

(iii) Remove the top cover plate. If the selector lever shaft has been left in position on the gearbox, then remove the three setscrews(on R.H. side of box) securing the bearing covers of it and withdraw the shaft through the aperture in the side of the gearbox.

(iv) Remove the dipstick. With a suitable box spanner, remove the damper pump oil feed tube assembly situated near the dipstick. Remove the side cover plate.

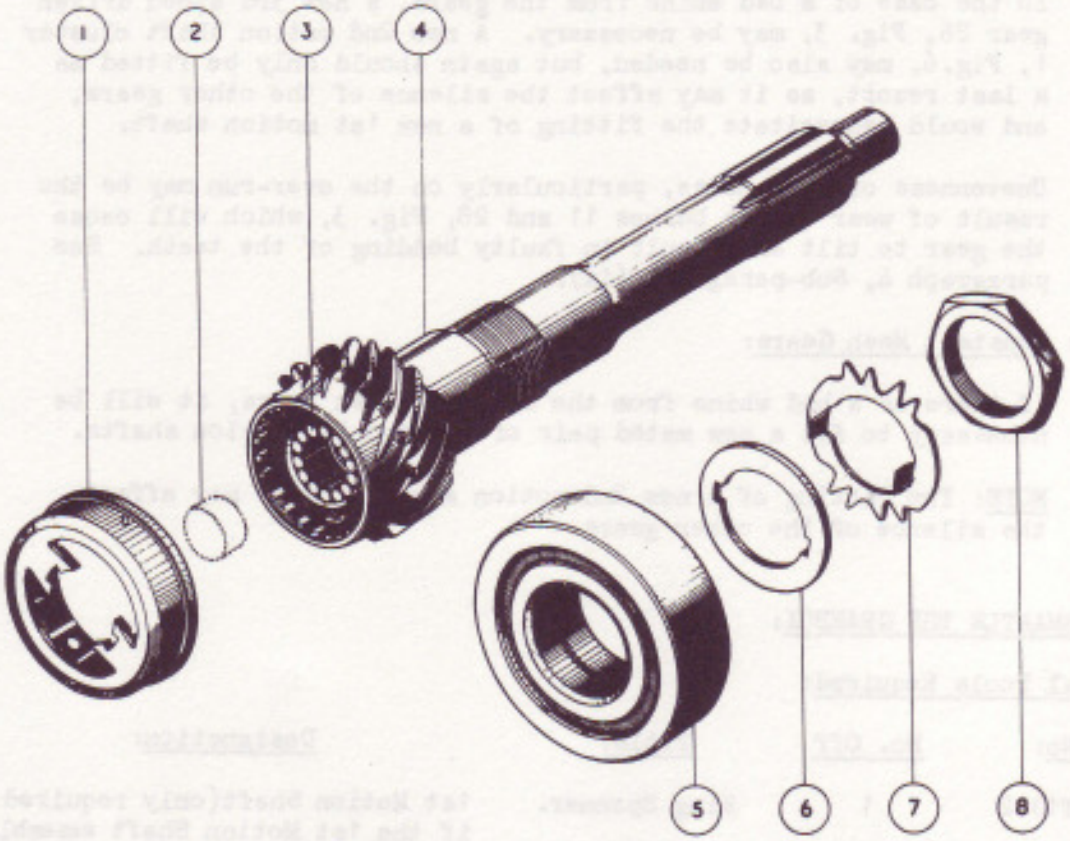

FIG. 2. EXPLODED VIEW - 1ST MOTION SHAFT.

1. Cone Assembly.
2. Roller Retainer.
3. Rollers. (14 Off)
4. Shaft - 1st Motion.
5. Ball Bearing.
6. Washer.
7. Lockwasher.
8. Nut.

(v) Remove the 6 nuts securing the front end cover to the gearbox and withdraw the 1st motion shaft assembly which contains 14 rollers, (3 Fig.2). Recover any rollers which may have fallen into the gearbox, also the Bakelite roller retainer (2). It should be noted that the function of the roller retainer is to keep the 14 rollers in position in the 1st motion shaft during assembly to the gearbox. It is pushed by the nose of the 3rd motion shaft into the 1st motion shaft where it remains and plays no further part. Remove the cone (1 Fig. 2).

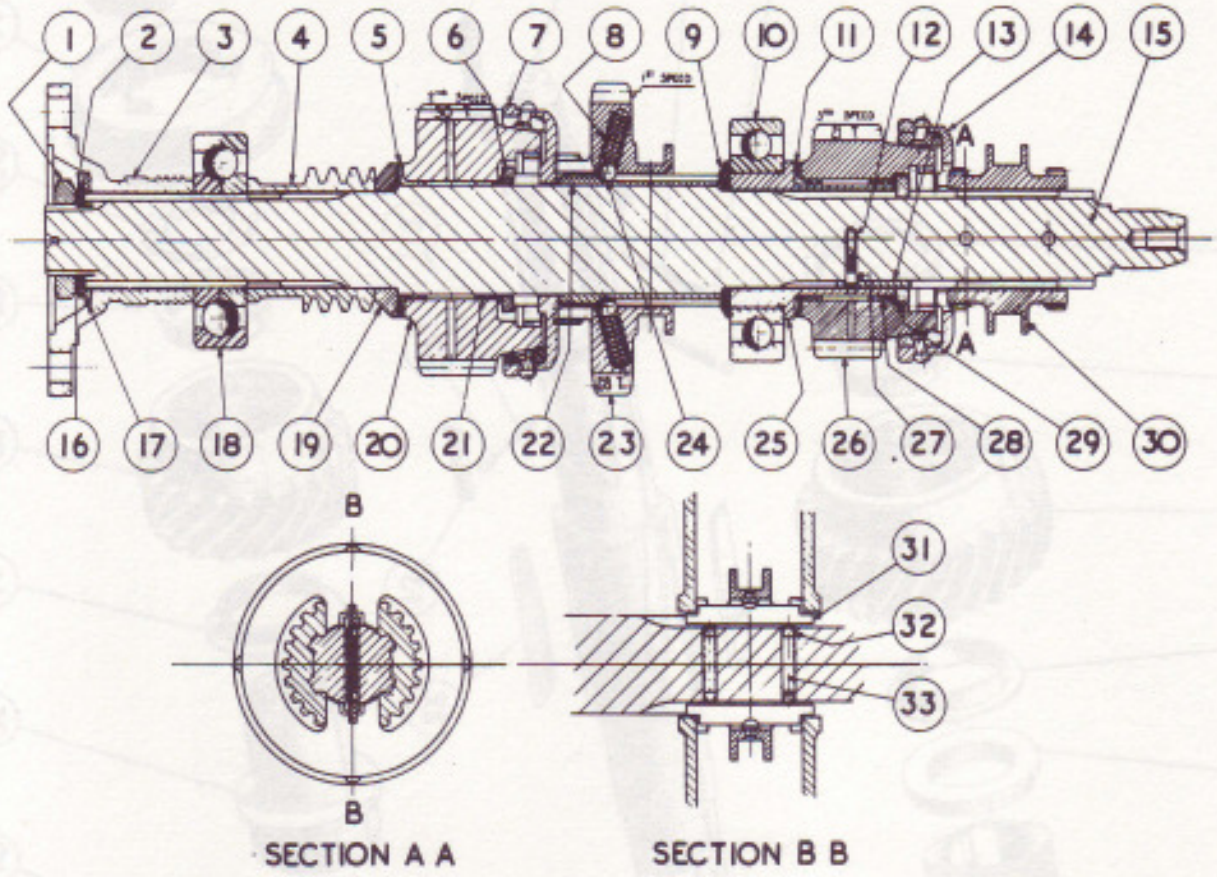

FIG. 3. SECTION - 3RD MOTION SHAFT. (EARLY TYPE)

1. Nut - Rear End.
2. Washer - Rear End.
3. Coupling Flange.
4. Worm Gear - Servo Drive.
5. Bush - 2nd Speed Gear.
6. Adjusting Washer (range off)
7. Cone Assembly.
8. Spring - 1st Speed Gear.
9. Adjusting Washer (range off)
10. Ball Bearing.
11. Bush - 3rd Speed Gear.
12. Spring - Pin.
13. Key, locating.
14. Cone, assembly.
15. Shaft, 3rd Motion.
16. Lockwasher - Rear End.
17. Adjusting Washer.(range off)
18. Ball Bearing - Rear End.
19. Adjusting Washer (range off)
20. Gear, 2nd Speed.
21. Bush - 2nd Speed Gear.
22. Key - 1st Speed Gear.
23. Gear, 1st Speed.
24. Ball (2 off) 1st Speed Gear.
25. Sleeve.
26. Gear, 3rd Speed.
27. Pin - Locating Key.
28. Bush - 3rd Speed Gear.
29. Thrust Washer.
30. Sliding Piece.
31. Key. (2 off)
32. Ball.(4 off)
33. Spring. (2 off)

(vi) Temporarily fit a Jubilee clip to the front end of the 3rd motion shaft, i.e. against the sliding piece (30 Fig.3) so as to keep the parts at the front end in position during the removal of the shaft.

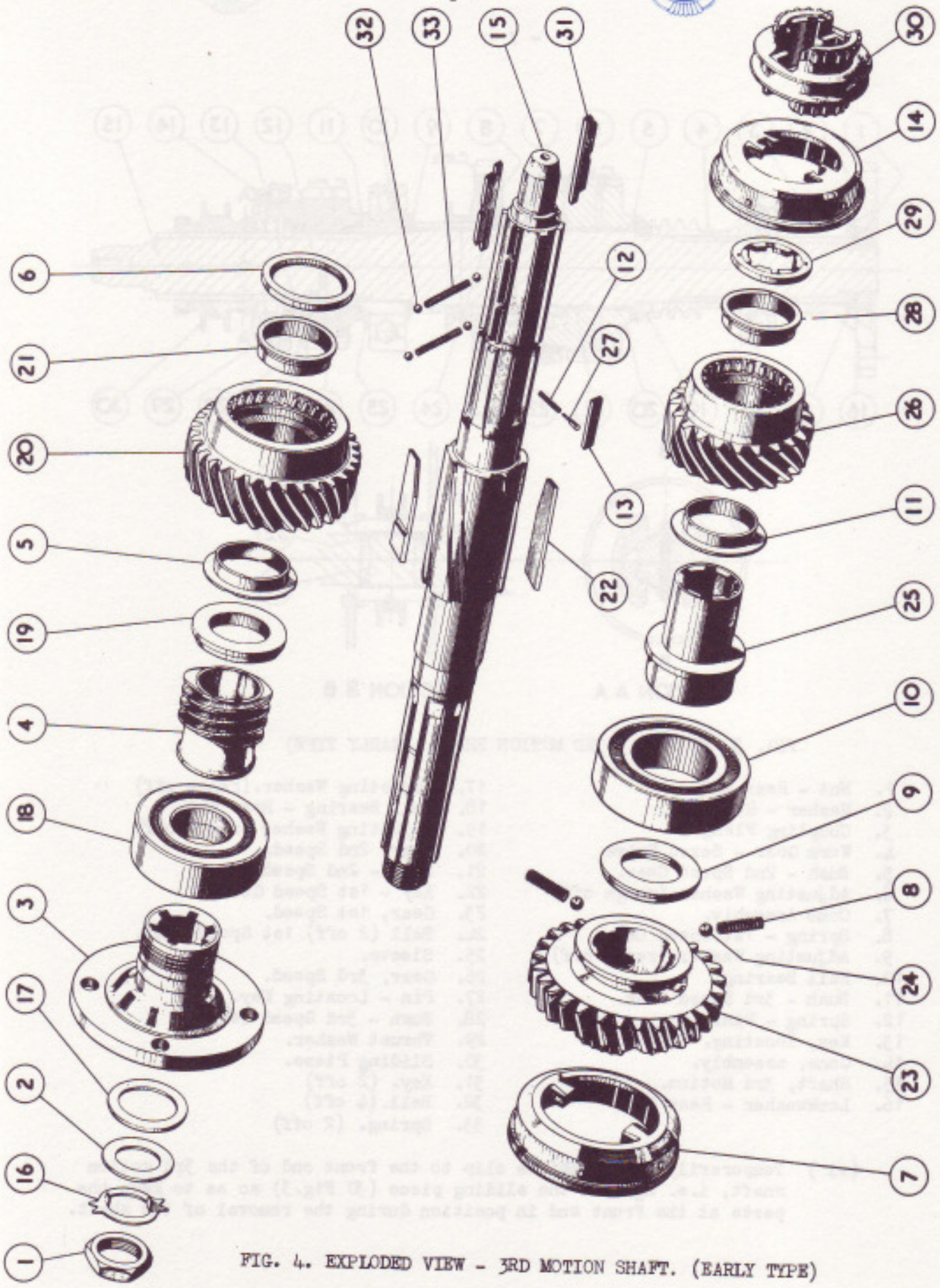

FIG. 4. EXPLODED VIEW - 3RD MOTION SHAFT. (EARLY TYPE)

(vii) Remove the nut 1, Fig.3, (which has a R.H.Thread) from the rear end of the 3rd motion shaft, using the box spanner, 1641/T1004 and the key STD-504.

If these tools are not available, then use a suitable box spanner. Remove the lockwasher, the two remaining washers and the coupling flange (3). To prevent the shaft from turning while removing the nut (1), place two 7/16" dia. fitting bolts in the coupling. Place a lever between the bolts and hold shaft in the opposite direction.

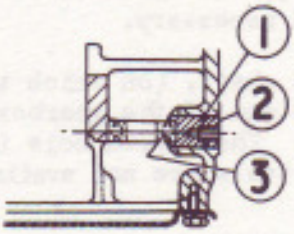

1. Rubber sealing ring.
2. Locating piece.
3. Ball Bearing(fitted to Servo Drive Shaft).

FIG. 5. LOCATING PIECE (NO.2) - SERVO DRIVE SHAFT.

(viii) Remove the 12 nuts securing the rear end cover assembly to the gearbox. Remove the torque bracket. Three tapped holes (.250" dia. 26 T.P.I.-R.H.), are provided in the cover for removal purposes. It will be necessary to make three simple extractors from .250" dia. bolts or setscrews to suit the tapped holes. They should be about 2¼" long and threaded their full length. Screw the extractors into the cover and remove it progressively. As the inner race of the rear ball bearing (18 Fig.3), is in two halves, the front half will have remained on the shaft.

(ix) The removal of the rear end cover will have disclosed the locating piece 2, Fig. 5, (fitted at the end of the box), which secures the servo drive shaft unit in position. It is provided with a .3125" dia. tapped hole, 22 T.P.I.- R.H., for removal purposes. Remove with the extractor 1639/T1010 and the key STD-503. If these tools are not available, use a suitable setscrew or bolt. Remove the four countersunk headed screws (on R.H. side of gearbox) which secures the steel housing of the servo drive to the gearbox. The servo drive can now be removed by using a suitable drift on the inner end of the shaft and carefully tapping it out.

(x) Remove the hexagon headed adaptor (plug) situated at the rear of the gearbox. The end of this adaptor protrudes into the casing of the shock damper oil pump and speedometer drive unit, and no attempt must be made to remove this unit before removing the adaptor, otherwise damage would occur to the aluminium casing of the pump. Remove the damper pump unit (on L.H. side of gearbox) secured by three nuts.

(xi) The next operation is to remove the 2nd motion shaft (1, Fig.6) as follows:-

a) Remove the locating screw from underneath the rear end of gearbox.

b) Screw the extractor, 1639/T1011, into the front end of the bearing shaft (4), and with the key STD-503, withdraw the bearing shaft from the gearbox. The tapped hole in the shaft is .375" dia. 20 T.P.I. - R.H. If tools are not available, use a suitable bolt or setscrew.

c) Lift or lever the 2nd motion shaft out of position and collect the washers, 3 and 7, Fig. 6.

NOTE: Examine the roller bearings (2 and 5) for flats on the rollers and fit new bearings if found necessary.

(xii) Screw the extractor 1639/T1009 into the guide shaft, (on which the two forks are located) visible from the front end of the gearbox, and with the key STD-503, withdraw the shaft. The tapped hole in the shaft is .250" dia. 26 T.P.I. - R.H. If tools are not available, use a suitable bolt or setscrew.

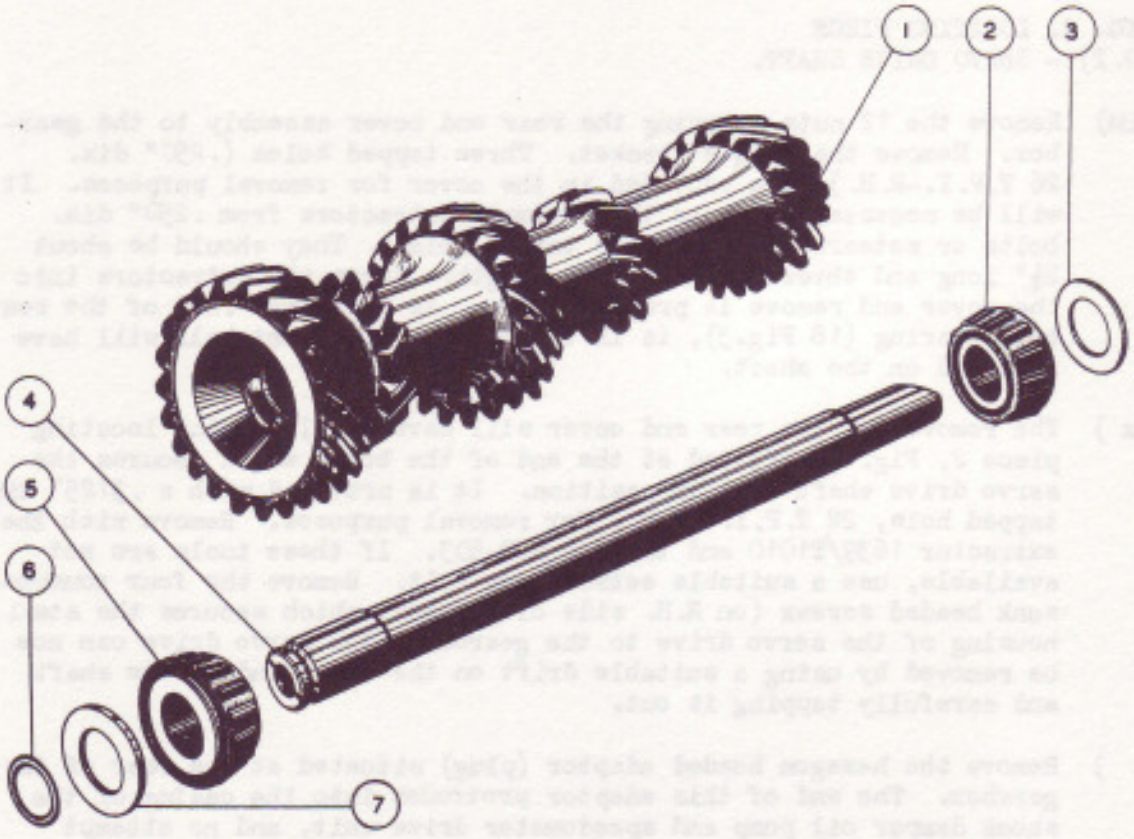

FIG. 6. EXPLODED VIEW - 2ND MOTION SHAFT.

1. Second Motion Shaft Cluster
2. Roller Bearing, rear end.
3. Washer - Rear end.
4. Bearing Shaft - Layshaft.
5. Roller Bearing, front end.
6. Rubber Sealing Ring.
7. Adjusting Washer (range off).

(xiii) Mark the two operating forks, 1 Fig.9, and 5 Fig.11, so that they may be replaced in their original positions. Put the reverse motion shaft in the forward position.

(xiv) Secure the extractor 1639/T1008 to the front end of the gearbox and screw the threaded end of the spindle into the nose of the 3rd motion shaft. Place the circular guide sleeve of the tool into the rear end bore of the gearbox (with recess in sleeve facing inwards). Turn handle to push the shaft rearwards until the central ball bearing 10, Fig.3, is just clear of its housing in the gearbox. Remove the tool and manoeuvre the two operating forks from the shaft assembly and finally withdraw the shaft from the box and remove the two forks. If the tool is not available, use a suitable drift on the front end of the shaft and carefully drive it towards the rear until the ball bearing (10) is just clear of its housing. It is essential when removing the shaft by this method, that the rear end of it should be held in line to prevent cross binding of the central bearing. Temporarily fit a Jubilee clip to the rear end of the 3rd motion shaft.

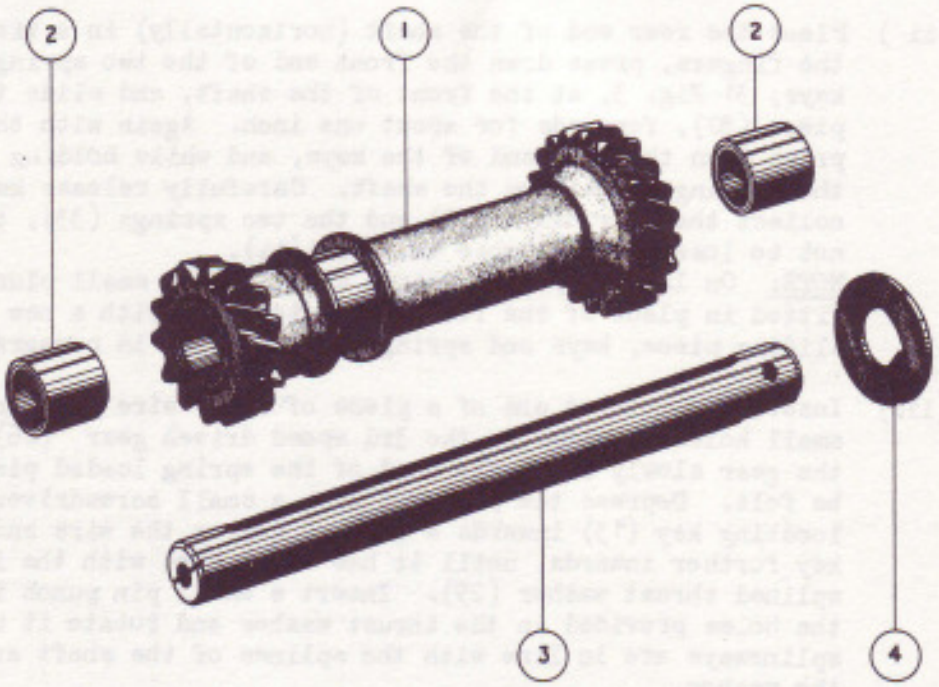

FIG. 7. EXPLODED VIEW - REVERSE MOTION SHAFT.

1. Reverse shaft and Gears.
2. Bushes.
3. Bearing Shaft.
4. Thrust Washer.

(xv) Normally it should not be necessary to remove the reverse motion shaft 1, Fig. 7, but in the event of this being required:-

a) Remove the locating screw from underneath the front end of the gearbox.

b) Screw the extractor 1639/T1011, into the rear end of the bearing shaft (3), and while holding the reverse motion shaft, remove the bearing shaft with the key STD-503. Collect the thrust washer (4). If tools are not available, use a bolt or setscrew to suit the .375" dia. 20 T.P.I. - R.H. tapped hole.

(xvi) Thoroughly clean the gearbox and all dismantled parts.

NOTE: See paragraph 8, concerning the selector shafts.

3. TO DISMANTLE THE 3RD MOTION SHAFT ASSEMBLY:

(i) Remove temporary Jubilee clip from front end of shaft.

(ii) Place the rear end of the shaft (horizontally) in a vice. With the fingers, press down the front end of the two spring loaded keys, 31 Fig. 3, at the front of the shaft, and slide the sliding piece (30), forwards for about one inch. Again with the fingers, press down the rear end of the keys, and while holding them, remove the sliding piece from the shaft. Carefully release keys and collect the four balls (32) and the two springs (33), taking care not to lose them. Remove the cone (14).
NOTE: On later type 3rd motion shafts, four small plungers are fitted in place of the four balls, together with a new type sliding piece, keys and springs, as described in paragraph 5.

(iii) Insert the pointed end of a piece of stiff wire into one of the small holes provided in the 3rd speed driven gear (26), revolve the gear slowly until the head of the spring loaded pin (27) can be felt. Depress the pin, and with a small screwdriver, push the locating key (13) inwards a little, remove the wire and push the key further inwards, until it has disengaged with the internally splined thrust washer (29). Insert a small pin punch into one of the holes provided in the thrust washer and rotate it until the splineways are in line with the splines of the shaft and withdraw the washer.

(iv) Remove the gear (26) complete with its two floating bushes. As these bushes are identical with those fitted to the 2nd speed driven gear (20), with the exception that there may be a small variation in flange thickness, it is recommended that the bushes should be attached (wired) to their respective gears.

(v) The sleeve (25) carrying the ball bearing (10) can now be removed, but to prevent the loss of the spring loaded pin (27) and its spring (12), proceed as follows:-

a) With the small hole in the sleeve facing uppermost, slide the sleeve forward for about an inch.

b) Place a thumb on the shaft and in line with the hole in the sleeve and slowly slide the sleeve forwards followed by the thumb until the sleeve is about to release the pin and then trap it. Remove the pin and spring and the adjusting washer (9).

(vi) Remove all parts from the rear end of the shaft, i.e. up to the 1st speed driven gear (23).

(vii) Slide the two keys (22) towards the rear end of the shaft and remove. With two screwdrivers, prise up the two spring loaded balls (24), and slide the gear off the shaft, taking care not to lose the balls and springs.

(viii) Thoroughly clean all dismantled parts.

4. TO RE-ASSEMBLE THE 3RD MOTION SHAFT:

IMPORTANT: To be read before assembly:

(i) On chassis prior to (approximately) B-159-DZ, the gearbox 3rd motion shaft 15 Fig. 3 (Part No: RG-193) carried two grooved keyway splines at the front end. It is essential that these two splines should be subjected to a crack test as it has been discovered that cracks have occurred near to or where the two front cones contact the grooved splines. The area of contact on the side of these two splines will usually be found to be bright.

The Magnetic crack test is the most reliable and therefore recommended. If this is not possible, then a Chalk test should be carried out by the following approved method:-

a) Preparation of Part for Testing:

The part to be tested must be clean and free from oil. It may be degreased in a Chemical Cleaner or washed in paraffin which must be subsequently blown off, using an air blast.

b) Composition of Oil Bath:

The composition of the oil bath should be 75% paraffin and 25% oil (by volume). Vaclor Oil (as supplied by the Vacuum Oil Co.Ltd.) is recommended.

c) Heating of the Bath:

The bath may be heated by steam coil or other suitable means. The temperature of operation should be 85 - 90°C.

d) Time of Immersion in Oil Bath:

The part must be allowed to remain in the bath for a sufficient length of time to ensure that it reaches the bath temperature. A soaking period of 20 to 40 minutes is recommended.

e) Removal of Part from Bath:

After the part has been removed from the bath, it should be allowed to drain and the surfaces wiped, using fresh cloths.

f) Chalk Testing:

The surfaces to be tested (the two grooved keyway splines at the front end of the 3rd motion shaft) should be given a uniform coating of clean French Chalk. All surplus chalk not adhering to the surface should be removed by shaking the part and striking it sharply with a **wooden mallet**.

g) Examination:

Allow time for the part to cool to room temperature before subjecting the part to visual inspection for cracks. The crack or cracks will be visible as a yellowish coloured line or patch on the chalk surface.

(ii) If a crack is discovered, then it will be necessary to fit a new 3rd motion shaft with strengthened (non-keyway) splines and associated parts as described in paragraph 5. These strengthened type shafts have been fitted to gearboxes on (approximately) Chassis B-159-DZ and onwards.

(iii) All chassis from (approximately) B-150-DZ and onwards have had a square edge type ball bearing fitted to the rear end of the 3rd motion shaft and also to the 1st motion shaft. This modification must always be carried out on all earlier chassis on which the new type bearings have not been fitted whenever a gearbox is dismantled for any purpose. The earlier type ball bearings have a large radius on each side of the outer diameter of the outer race, whereas, the later type bearings have a square corner on one side of the outer diameter of the outer race and this square corner must always be fitted so that it is adjacent to the spring retaining ring. (See paragraph 4A). It can be ascertained whether the new type bearings have been fitted by visual inspection without removing them from the rear or front end covers of the gearbox. Whenever a spring retaining ring (circlip) is removed, carefully check when refitting it that it fits snugly in its groove the whole way round.

The special ring spanner 1641/T1002 should be used when removing the retaining nut 8, Fig. 2, from the 1st motion shaft, failing this, then use a long box spanner having 2.052" (52.12 m/m) width across the flats. The part numbers of the new bearings are:-
RG-5958, Ball Bearing - 1st Motion Shaft.
RG-5959 - Ball Bearing - 3rd Motion Shaft.

Will all Retailers please notify the London Service Station of the chassis number of the car whenever they incorporate this modification.

Prior to re-assembling the parts to the 3rd motion shaft, the following should also receive attention:-

(iv) Hold the two flat keys 22, Fig. 3, together with the groove of each key in line with each other and check them for equal length. If one key is a little longer than the other, grind off or stone as necessary the longer end.

(v) To prevent the possibility of any of the three cones from sticking on the conical portion of their respective gears, polish as necessary the cone of each gear. Place each cone on to its gear, and check that they can be lifted off quite freely without any tendency to stick. Do not touch the bronze insert of the cones.

(vi) Check that all keys are free from burrs and that the two keys 31, Fig. 3, slide easily in their grooves in the 3rd motion shaft.

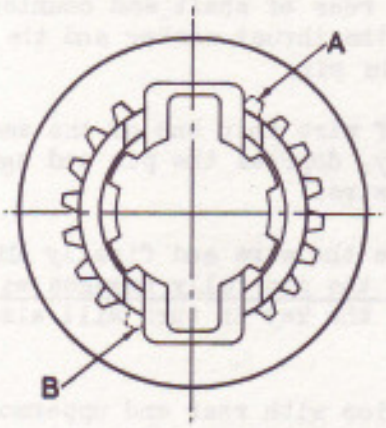

FIG. 8. REAR END VIEW OF SLIDING PIECE.

(vii) On the early type sliding piece 30, Fig. 3, there are two non-full teeth 'A' and 'B' Fig. 8, (shown in dotted lines) at the rear end i.e. the end which has the least number of teeth and which engages with the 3rd speed gear (26). These two teeth should be removed by grinding. It may be found however, that they have already been removed. If a new 3rd motion shaft with strengthened splines is to be fitted, as described in paragraph 5, then the above mentioned operation will not be necessary, as the existing sliding piece will have to be replaced by a new one one of slightly different design.

TO RE-ASSEMBLE:

(viii) Place the rear end of shaft in a vice with the hole which takes the pin (27) facing uppermost. Fit the adjusting washer 9, (note internal chamfer on abutting face) followed by the splined sleeve (25) carrying the ball bearing (10). Fit the floating bush (28), i.e. the one with the small diameter flange, to the front end of the 3rd speed driven gear (26) as shown in Fig. 3. (See "Note" below). Fit the rear bush (11), but do not oil the bushes at this stage. Place the gear on the splined sleeve, refit the internally splined thrust washer (29), and insert the locating key (13) about half way to prevent the washer from turning.

(ix) Now check with feelers, the amount of end float in the 3rd speed driven gear. If this exceeds .002" (0.05 m/m) fit a thicker adjusting washer (9). If new floating bushes have to be fitted, then it may be necessary to fit a thinner adjusting washer. The gear should be fitted so that it rotates freely with the minimum of end float.

NOTE: The principal dimensions of the floating bushes (new) as fitted to the 3rd and 2nd speed driven gears are as follows:-

a)	Flange thickness	0.075 " - 1	(1.90 m/m)
b)	External diameter	1.5937" + $\frac{1}{4}$	(40.48 m/m)
c)	External diameter	1.7488" - $\frac{1}{4}$	(40.42 m/m)

Should these bushes show signs of wear which would allow any tilting of the gear, then new bushes must be fitted.

If a new 3rd or 2nd speed driven gear has to be fitted, then new bushes must be fitted with the gear. The checking of end float of the 2nd speed driven gear is described in sub-paragraph (xiii).

(x) Remove the splined thrust washer, the 3rd speed gear and the splined sleeve and oil the bushes of the gear. Fit the pin (27) to its spring and place them in the shaft.

Press down the pin and slide the sleeve on to the shaft, making sure that the small hole in it registers with the head of the pin. Refit the 3rd speed gear and the splined thrust washer. Insert the locating key 13, (with hole in it towards rear of shaft and counterbore facing innermost), into a spline of the thrust washer and the keyway in the sleeve and slide it up to the pin.

Insert the pointed end of a piece of stiff wire into one of the small holes in the gear, revolve it as necessary, depress the pin and again slide the key inwards until it meets the wire.

Applying slight tension to the key, remove the wire and finally slide the key further inwards until the head of the pin fully engages with the counterbore in the key and locks it - the key in turn will also have locked the splined washer.

(xi) Re-position the shaft vertically in the vice with rear end uppermost. Insert the two springs 8, Fig. 3, into the 1st speed gear and pass the gear down the shaft as far as the journal which carries the 2nd speed gear (20). Grease and insert the two balls (24), depress them and slide the gear on to the splines.

(xii) Again re-position shaft in vice horizontally, and pass the two keys (22) into position - thin tapered ends first i.e. thin ends towards front of shaft. It is a good idea to make two small wedges tapering from the thickness of a key to nothing, to pilot the keys under and past the spring loaded balls. The loose wedges can then be removed.

(xiii) The next operation is to check the amount of end float in the 2nd speed driven gear, 20 Fig. 3, as follows:-

a) Place the adjusting washer 6, (note internal chamfer on abutting face) on the shaft. Fit the floating bush (21) i.e. the one with the small diameter flange, to the front end of the 2nd speed gear as shown in Fig. 3. (See "NOTE", Sub-paragraph ix). Fit the rear bush (5), but do not oil the bushes at this stage.

Fit the gear to the shaft and place the adjusting washer (19) in position and the correct way round. Push hard against this washer and check with feelers the amount of end float in the gear. If this exceeds .002" (0.05 m/m), fit a thicker adjusting washer (6). If new floating bushes have to be fitted, then it may be necessary to fit a thinner adjusting washer. The gear should be fitted so that it rotates freely with the minimum of end float.

b) Now remove the 2nd speed gear and the washer (6) and oil the bushes. Place the cone (7), on the shaft followed by the washer (6), the gear (20), the washer (19), the worm gear (4), the two halves of the inner race of the ball bearing (18), the coupling flange (3) and the adjusting washer (17).

c) **Push** hard against the coupling flange and check that the adjusting washer (17) stands out beyond the shaft shoulders (ends of splines) from .006" to .010" (0.15 to 0.25 m/m), to give the required amount **of** nip to the coupling flange which is essential.

Place the washer (2) against the adjusting washer (omit the lockwasher 16 at this stage) and fully tighten up the nut (1), and again check that the 2nd speed gear rotates freely.

(xiv) With the nut 1, Fig. 3, still fully tightened up, a check should now be made that the flat keys (22) have from .015" to .025"(0.38-0.63m/m) end float between the washer (9) and the cone (7) with the latter held **tight**ly up to the 2nd speed gear (20). If this clearance is insufficient, remove the keys, and with the grooves of each key in line with each other, clamp them together and shorten them an equal amount to give the required amount of end float. It is not anticipated that any alteration will have to be made in this respect.

(xv) Remove all parts from the rear end of the shaft **up** to the front half of the inner race of the ball bearing (18) and temporarily attach a Jubilee clip to the rear end of the shaft.

(xvi) Fit the cone (14) to the front end of the shaft. Place the two springs (33) in the shaft, grease the four balls (32), or plungers if fitted, and place these on the ends of the springs. Position the two keys over the balls or plungers, depress the keys and slide the sliding piece (30) on to the shaft, making sure that it is the correct way round which can be ascertained by checking that the teeth of it engage with the corresponding teeth in the 3rd speed gear. Temporarily fit a Jubilee clip to the front end of the shaft to keep parts in position.

4A. FRONT END COVER:

On a certain number of cars prior to Chassis No:B-170-BH, the groove in the front end cover of the gearbox in which the spring retaining

ring is located, is 4.012" + .010 (101.9 + 0.25 m/m) diameter, which should be increased to the dimension given below. Should it be found however, that a square edge type ball bearing has already been fitted to the front end cover, then it will not be necessary to carry out the following:-

(i) Remove the spring retaining ring from the cover and tap out the 1st motion shaft complete with its ball bearing.

(ii) Carefully measure the diameter of the groove, and if this is found to be 4.012" + .010" (101.9 + 0.25 m/m), mount the cover in a lathe and increase the diameter to 4.074" + .010 (103.48 + 0.25 m/m). The width of the groove is .125" + .010 (3.17 + 0.25 m/m) and must not be altered.

(iii) Discard the original spring retaining ring and fit a correspondingly larger one Part No: RG-5311.

Will all Retailers please notify the London Service Station of the chassis number of the car whenever they carry out this alteration to the front end cover.

5. TO FIT A NEW 3RD MOTION SHAFT - WITH STRENGTHENED SPLINES:

Should it be necessary to fit a new 3rd motion shaft for the reason explained at the commencement of paragraph 4, the following parts will be required:-

Part No:	Description:	No. Off:
RG-5469	3rd Motion Shaft.	1
RG-5470	Sliding Piece - 3rd and 4th.	1
RG-5471	Key - Sliding Piece - 3rd and 4th.	2
RG-7009	Plunger - Sliding Piece - 3rd and 4th.	4
GB-4842	Spring - Plunger.	2

Discard the following parts illustrated on Fig. 3. 3rd Motion Shaft (15); Sliding Piece - 3rd and 4th (30); Keys 2 Off (31); Balls 4 Off (32) and Springs 2 Off (33).

Making sure that the new shaft is free from any burrs, fit the remaining original parts to it exactly as described in paragraph 4. "To Re-assemble the 3rd Motion Shaft", (with the exception of the instructions contained in sub-paragraph xvi), and then proceed to fit the remaining new parts as follows:-

a) With the cone 14 Fig. 3, in position, place the new sliding piece (RG-5470) on the shaft the correct way round, and while slowly rotating the 3rd speed gear, check each tooth of the sliding piece in every position in the gear for freedom of engagement and disengagement and then remove the sliding piece.

b) Fit the two new springs (GB-4842) to the two holes in the front end of the shaft, place a new plunger (RG-7009) on to the end of each spring and fit the two new bridge shaped keys (RG-5471) over the plungers. Compress the keys and slide the sliding piece over the keys and into position.

c) Temporarily fit a Jubilee clip to the front end of the shaft to keep parts in position.
NOTE: Before fitting the plungers and bridge shaped keys, sharp corners if any, should be removed.

Will all Retailers please notify the London Service Station of the chassis number of the car, whenever they incorporate this modification.

6. TO RE-ASSEMBLE THE GEARBOX:

NOTE: When re-assembling the gearbox, discard all old tab locking washers, cork and Vellumoid joints and aluminium joint washers. Fit new rubber sealing rings to the guide shaft (on which the two forks are located), locating piece of servo drive, bearing shaft of the 2nd motion shaft and

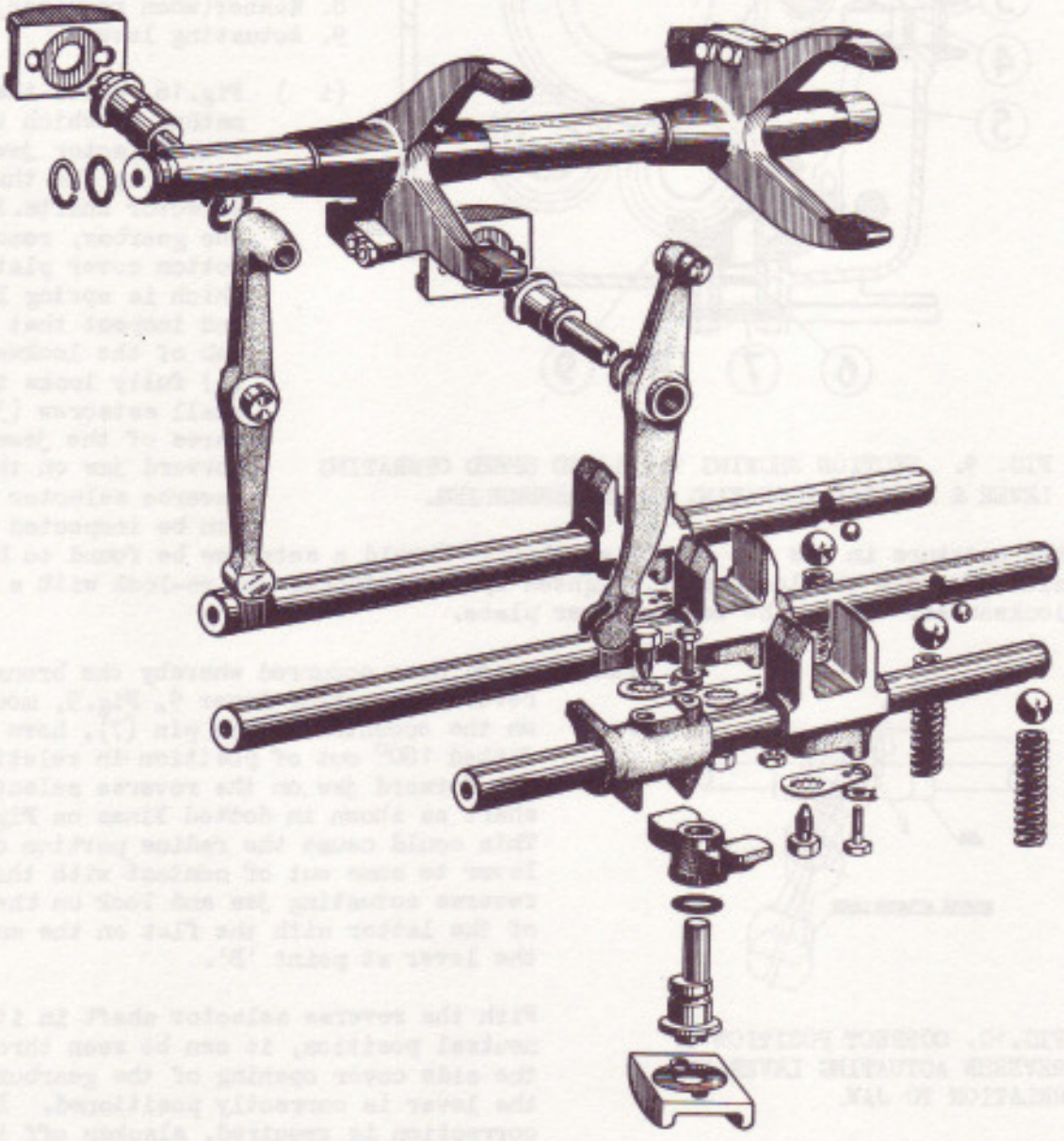

FIG. 8A. EXPLODED VIEW - INTERNAL SELECTOR MECHANISM.

the three eccentric pivot pins in the unlikely event of the latter having been removed. When parts containing a rubber sealing ring are being re-assembled to the gearbox, first lightly smear the sealing ring with grease. On gear boxes fitted to a number of early type chassis, plain washers were not fitted beneath the flat spring washers of the pressed steel covers. To ensure that the nuts do not become thread bound, 28, K-4407/Z, .250" diameter plain washers should be fitted. Should the selector shafts have been removed, then refer to paragraph 9.

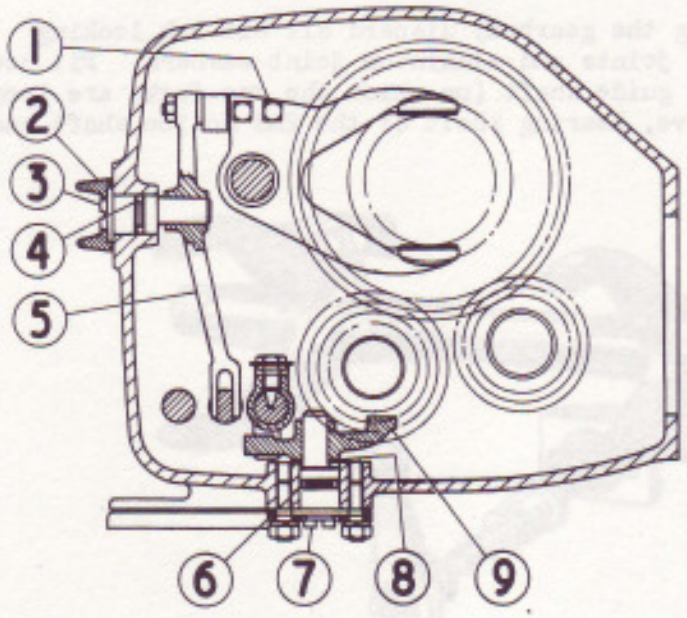

FIG. 9. SECTION SHOWING 1ST & 2ND SPEED OPERATING LEVER & REVERSE ACTUATING LEVER ASSEMBLIES.

1. Operating fork.
2. Plate-eccentric pivot pin.
3. Eccentric pivot pin.
4. Rubber sealing ring.
5. Actuating lever.
6. Rubber sealing ring.
7. Eccentric pivot pin.
8. Washer(when required).
9. Actuating lever.

(i) Fig.16, shows the method by which the four selector jaws are locked to the three selector shafts. Invert the gearbox, remove the bottom cover plate which is spring loaded, and inspect that the tab of the lockwasher (4) fully locks the small setscrew (3) on three of the jaws. (The forward jaw on the reverse selector shaft can be inspected through the aperture in the top of the gearbox.) Should a setscrew be found to be slack, remove the lockwasher, tighten up the setscrew and re-lock with a new lockwasher. Refit the bottom cover plate.

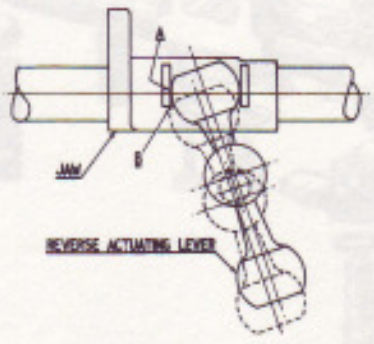

FIG.10. CORRECT POSITION OF REVERSE ACTUATING LEVER IN RELATION TO JAW.

(ii) Cases have occurred whereby the bronze reverse actuating lever 9, Fig.9, mounted on the eccentric pivot pin (7), have been fitted 180° out of position in relation to the forward jaw on the reverse selector shaft as shown in dotted lines on Fig.10. This could cause the radius portion of the lever to come out of contact with the reverse actuating jaw and lock on the edge of the latter with the flat on the end of the lever at point 'B'.

With the reverse selector shaft in its neutral position, it can be seen through the side cover opening of the gearbox if the lever is correctly positioned. If correction is required, slacken off the two 1/4" B.S.F. nuts (beneath the gearbox) securing the locking plate of the eccentric pivot pin 7, Fig.9, and with a screwdriver, rotate the eccentric pin

until the bronze lever has maximum engagement in the reverse actuating jaw as shown at point 'A' Fig.10. Lock the eccentric pin in position by re-tightening the two nuts. The above condition should be investigated whenever a gearbox is serviced, whether the reverse shaft has been removed or not. Should alteration be necessary, it will be essential to check and adjust (laterally), the reverse motion shaft as described in Sub-paragraphs (iii)d, and (iv).

(iii) If the reverse motion shaft has been removed, refit and adjust as follows:-

a) Oil and place the two bushes (2 Fig.7) into the shaft.

b) Hold the reverse motion shaft in the gearbox and enter the bearing shaft (3) into the bore of its rear support and then into the reverse motion shaft. Place the bronze thrust washer (4) on to the front end of the bearing shaft with the grooved side against the gear and push the bearing shaft into position.

c) Line up the hole in the front end of the bearing shaft with the corresponding hole beneath the gearbox. (A screwdriver slot for adjustment purposes is provided at the rear end of the shaft.) Fit the locating screw and lock.

d) Place the reverse selector shaft 3, Fig.17, into its neutral position. Insert feeler gauges .092" thick (2.33 m/m) between the bearing shaft support at the rear end of the gearbox and the face of the small gear of the shaft, rotate the eccentric pin, i.e. the one beneath the gearbox, until the face of the gear lightly nips the feelers and then lock the eccentric pivot pin in position by tightening up the two 1/4" B.S.F. nuts.

(iv) Move the reverse motion shaft into reverse gear and check the selector shaft 3, Fig. 17, for "over-ride" (explained below). In the unlikely event of this being absent, examine if the reverse motion shaft is hard up against the bronze thrust washer 4, Fig. 7, at the front end of the shaft in which case, the washer should be removed and reduced on its non-grooved side as necessary.

The term "over-ride" means the amount by which a selector shaft can be moved beyond the position where the gear is fully engaged as determined by the .500" diameter ball centralizing itself in the corresponding groove of the selector shaft. "Over-ride" should be checked for with the aid of a bar (about 15" long by about 1/2" to 5/8" diameter) placed through the aperture in the top of the gearbox and in the jaw of the selector shaft to be checked. The "over-ride" can be felt by pressure exerted on the bar which when released, allows the selector ball to click back into position. "Over-ride" although it may only amount to about 1/16" (1.6 m/m) movement of the shaft, is necessary to ensure that a ball can always fully locate itself in its corresponding groove in the shaft and thus prevent a gear from jumping out of position.

(v) With the actuating levers 5, Fig. 9 and 4, Fig. 11, on their respective eccentric pivot pins, place the two forks loosely in the gearbox in their relative positions. Lightly smear the outer race of

the central ball bearing of the 3rd motion shaft with grease. Remove the temporary Jubilee clip from the rear end of the shaft and enter the shaft assembly into the rear end of the gearbox (do not enter the central ball bearing into its housing at this stage) sufficiently to be able to partially engage the rear fork in the groove of the 1st speed driven gear. Next manoeuvre the front fork into the groove of the sliding piece. Line up the central ball bearing with its housing, and while the shaft is being held in line, just enter the bearing into its housing. While still holding the shaft, place the circular guide sleeve of the extractor 1639/T1008 into the rear end of the box and carefully tap the shaft until the central bearing is in position, simultaneously guiding the forks fully into their corresponding grooves. If the tool is not available, it will be necessary to hold the shaft in line by hand while it is being tapped into position. Care must be taken to prevent the bearing from cross binding.

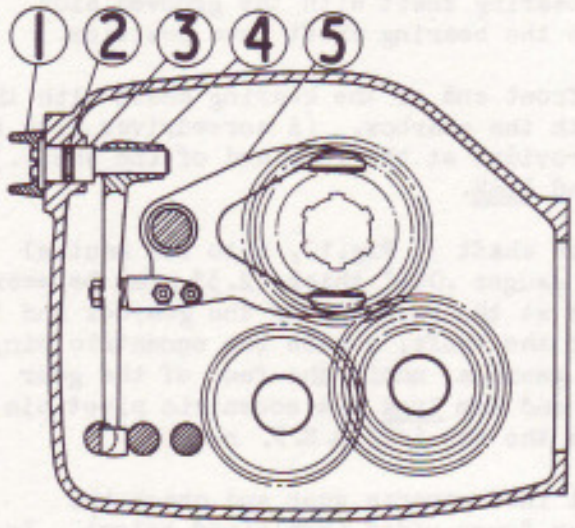

FIG. 11. SECTION - 3rd & 4th SPEED OPERATING LEVER ASSEMBLY.

1. Plate - eccentric pivot pin.
2. Rubber sealing ring.
3. Eccentric pivot pin.
4. Actuating lever.
5. Operating fork.

(vi) Oil bores of forks and connect them to their respective actuating levers and refit the guide shaft. To ease entry of shaft in the forks, rock the rear end of the 3rd motion shaft. The guide shaft must slide easily into position. Do not use force.

(vii) The next operation is to fit the 2nd motion shaft as follows:-

a) In order to correctly position the rear case hardened washer 3 Fig. 6 while entering the bearing shaft (4) into the gearbox, it is a good idea to make a mandril .874" dia. (22.2 m/m) by about 5" (127 m/m) long and enter it in the rear of the box and place the washer on the end of it as shown in Fig. 12.

b) Lightly grease the two roller bearings and place them in the 2nd motion shaft. Fit the shaft in the box (small dia. gear at rear) and push the mandril inwards to hold the shaft. Fit an adjusting washer 7, Fig.6, to the front end of the shaft of a thickness which will allow it to be a light tap-in fit so as to pre-load the 2nd motion shaft from .002" to .004"(0.050-0.10m/m).

c) Fit the bearing shaft (4) and line up the hole in the rear end of it with the corresponding hole beneath the gearbox.
NOTE: The line across the diameter of the front end face of the bearing shaft is in line with the hole at the rear end of it.
Fit the locating screw and lock.

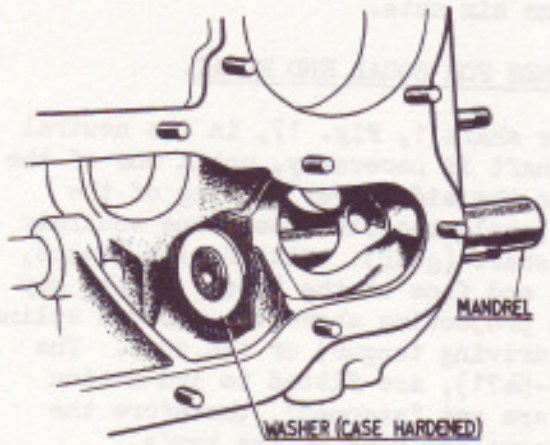

FIG. 12. POSITIONING OF REAR WASHER OF 2ND MOTION SHAFT DURING ASSEMBLY.

(viii) Refit the servo drive assembly as follows -
NOTE: If there has been evidence of an oil leak past the oil seal as fitted to the housing of the servo drive shaft, then a new seal should be fitted as described in Sub-section BJ-5, under paragraph "To Replace the Oil Seal as fitted to the Servo Drive Shaft".

a) Tap the servo drive shaft (minus the housing) into the gearbox simultaneously rotating the 3rd motion shaft to allow engagement of the gears, tap in until the ball bearing at the inner end of the servo shaft is in the midway position relative to the hole at the rear end of the gearbox into which the locating piece 2, Fig. 5, is fitted. Fit the locating piece, making sure it is fully in position.

b) With a feeler gauge about .015" (0.38 m/m) thick, carefully manoeuvre the tip of the oil seal on to the shaft. Turn the housing until the small oil drain hole on the outer face of it is at the bottom, and then secure the housing by means of the four countersunk screws.

(ix) Remove Jubilee clip from rear end of the 3rd motion shaft and place the rear end cover in position, but before securing it to the gearbox, place the coupling flange on to the end of the shaft and tap the coupling forwards a few times so as to close the gap between the two halves of the inner race of the rear ball bearing. Place the torque bracket in position and secure it, together with the rear end cover to the gearbox by means of the 12 nuts.

Place the adjusting washer 17, Fig. 3, on to the 3rd motion shaft, followed by the washer (2), the lockwasher, (16) and fully tighten up the nut (1) and lock.

(x) Place a new Vellumoid joint between the cover and casing of the damper pump unit and also on the corresponding face of the gearbox. Fit the unit rotating the speedometer drive shaft to allow engagement of the gears and secure with the 3 nuts. Smear the thread of the hexagon headed adaptor (plug) with a jointing compound and screw it into the rear of the gearbox.

(xi) Remove Jubilee clip. Rotate the 3rd motion shaft until the two keys 31, Fig.3, at front end are horizontal, place the cone 1, Fig.2, on to front end of shaft, making sure that the two driving tongues of the cone have been placed in line with the keys. Smear the roller path of the 1st motion shaft with a soft type of grease. Place the 14 rollers (3) in position and then insert the Bakelite roller retainer (2) in the shaft to keep the rollers from falling out of place.

Rotate the front end cover until the oil drain hole is near the bottom and enter the shaft (rollers) on to the nose of the 3rd motion shaft, (taking care not to displace any of the rollers) and secure the front end cover with the six nuts.

(xii) TO MEASURE THE 3RD & 4TH SPEED CONES FOR EQUAL END FLOAT.

With the 3rd and 4th speed slector shaft 1, Fig. 17, in its neutral position, rotate the 3rd motion shaft if necessary, until one of the two keys 31, Fig.3, is opposite to the side cover opening of the gearbox, and through this opening, hold the 4th speed cone squarely on the taper of the first motion shaft (gear). With feeler gauges, measure the clearance between the end face of the "step" in the key (i.e. the end face of the portion projecting above the grooved spline of the shaft) and the rear face (driving tongue) of the cone. The later type bridge shaped keys (RG-5471), are fitted to 3rd motion shafts with strengthened splines are not "stepped", therefore the measurement is taken from the extreme end face of the key/s.

It is essential when measuring that the feelers are entered into position with a fairly light feel, otherwise there would be risk that the key might be pushed towards the rear of the shaft which would prevent correct measurement from being taken. Leave the feelers in position and then hold the opposite cone squarely on to the taper of the 3rd speed driven gear, and with a second set of feelers, measure the clearance as described above.

Each cone should have an end float of .020" to .030" (o.5 - 0.76 m/m). The end float of the cones is the same for gearboxes fitted with the later type 3rd motion shaft (RG-5469) and bridge shaped keys. If the end float requires equalising, slaken off the two 1/4" B.S.F. nuts securing the locking plate of the eccentric pin 3, Fig.11, (on right-hand side of box towards the front) and adjust the eccentric pin as necessary. Re-lock the pin and then check that the 3rd and 4th speed selector shaft has approximately an equal amount of "over-ride" in the fully forward and reward positions. While it is not essential that the "Over-ride" should be equal, it must always exist. The term "over-ride" is fully explained in sub-paragraph (iv).

NOTE: The total end float (.040" to .060"), (1.02 - 1.52 m/m) of the two cones is controlled by the thickness of the adjusting washer, 19, Fig.3. A thicker washer reduces total end float and a thinner one increases it. In the unlikely event of the washer having to be changed in this respect, then the thickness of the adjusting washer (17) must be adjusted accordingly to give the required amount of nip to the rear coupling flange as described in paragraph 4, sub-paragraph (xiii) C.

(xiii) TO MEASURE THE SECOND SPEED CONE FOR END FLOAT.

Place the 1st and 2nd speed selector shaft 2, Fig.17, in its neutral position. Hold the 2nd speed cone 7, Fig.3 squarely on the taper of the 2nd speed gear (20), and with the feelers, measure that there is a clearance of .015" to .025" (.038 - .063 m/m) between the end face of one of the flat keys (22) and the rear face (driving tongue) of the cone.

Should alteration be required in this respect, then adjust as necessary the eccentric pin 3, Fig. 9, (on R.H. side of gearbox towards the rear).

Check that the 1st and 2nd speed selector shaft has approximately an equal amount of "over-ride" in the fully forward and rearward positions. Move the selector shaft into the 1st speed position and examine that the 1st speed gear 23, Fig. 3, is in full engagement (laterally) with its opposing gear. If correction is necessary, a small adjustment can be obtained by movement of the eccentric pin 3, Fig. 9.

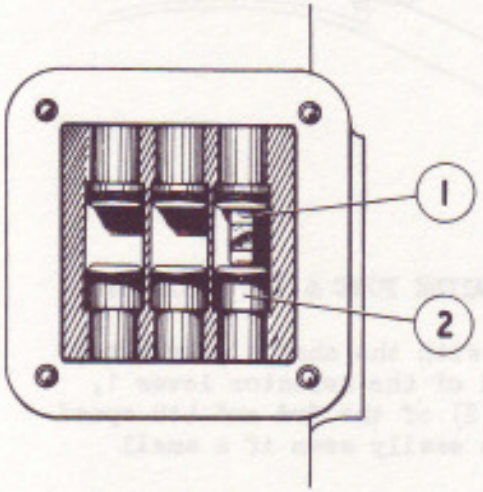

FIG. 13. CORRECT POSITION OF END OF SELECTOR LEVER (NO.1) IN RELATION TO JAW.

FINAL INSPECTION:

(xiv) Before the side cover plate is re-fitted to the gearbox, a final inspection should be made of the following points.

a) Check that the 2nd motion shaft is free from end float.
b) Check end float of 2nd, 3rd, and 4th speed cones.
c) Check all gears for free and full engagement and non-fouling. Also check "over-ride" of selector shafts.
d) Check all internal and external locked parts and make sure that the gearbox is free from foreign matter and that no nuts or washers securing the pressed steel covers have inadvertently fallen into the gearbox.

FINAL ASSEMBLY:

(xv) Refit the damper pump oil feed tube assembly, the dipstick, the side cover plate and the drain plug.

Smear the inner joint faces of the two aluminium bearing covers of the selector lever shaft assembly with a thin film of jointing compound, line up the oil return holes in the two covers, and with these two holes at the bottom, refit the assembly to the gearbox and secure with the three setscrews. Fit the top cover.

NOTE: The re-installation of the gearbox and the servo-motor is fully described in Section F, Sub-section BF-3 and Section J, Sub-section BJ-5 respectively. After this has been carried out and the gearbox replenished with oil, ascertain that there are no oil leaks from the gearbox, preferably when the box is warm.

7. SIDE CHANGE GEAR MECHANISM:

After refitting the gearbox to the car, and coupling the selector lever and the change gear lever shafts together at the spherical joint, and before replenishing the gearbox with fresh oil, the following checks should be carried out:-

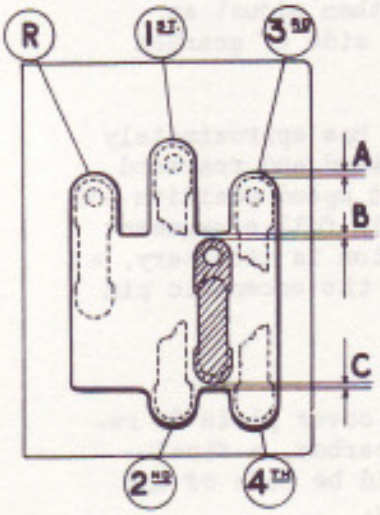

FIG.14. PLAN VIEW OF GATE.

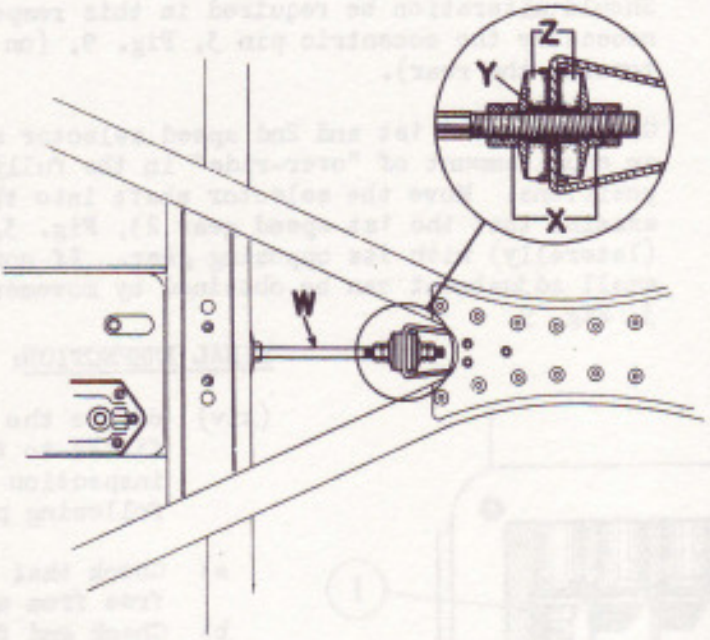

FIG. 14A. TIE ROD - ENGINE FORE & AFT LOCATION.

a) Remove the top cover from the gearbox, and with the change gear lever in its neutral position, check that the end of the selector lever 1, Fig. 13, is centrally situated in the jaw (2) of the 3rd and 4th speed selector shaft as shown. This will be more easily seen if a small electric lamp is placed in the gearbox.
NOTE: If the gearbox has been correctly refitted to the car as described in Section F, Sub-section BF-3, under paragraph "To refit the gearbox", and the load on the torque reaction rubbers correctly adjusted as per Sub-paragraph (xv) and "NOTE", then the end of the selector lever should be found to be centrally situated in the jaw of the 3rd and 4th speed selector shaft. It is essential that the torque reaction rubbers must not be used to line up the selector lever in the jaw.

b) Next check that there is a small gap at 'A', Fig. 14, when the change gear lever is moved into each of the in-gear positions i.e. reverse, 1st, 2nd, 3rd and 4th. If there is a difference between the front and rear gaps, the gate can be pivotted forwards or rearwards by slackening off the two 3/8" (B.S.F.) nuts on the inner side of the gate bracket. This should also give a reasonably equal clearance at gaps 'B' and 'C'.

c) Check that the change gear lever slides freely from end to end of the gate.
NOTE: If the adjustment (length) of the tie rod 'W' Fig. 14A, fitted between the rear end of the gearbox and to a bracket on a cross member of the frame has been interfered with and incorrectly set, this could cause the change gear lever to cross bind when moving it across the gate and/or prevent free movement of the selector lever 1, Fig.13, across the jaws (2). The adjustment of the tie rod is correctly set during assembly of the chassis and should not normally be disturbed unless the rubber blocks 'Z' Fig.14A, fitted to the rear and front end of the tie rod need renewing. The tie rod locates the engine and gearbox unit in

a fore and aft direction and the adjustment should be such as to impose no fore and aft deflection in the rubber mounting block on which the rear end of the gearbox rests and is attached to.

If new rubber blocks have been fitted, adjust the front end of the tie rod on the bench as described below and with the parts at the rear end loosely fitted, refit the assembly to the chassis.

Front End of Tie Rod:

With the inner nut at the front end of the tie rod screwed back as far as possible, tighten up the adjusting nut at the front end of it until the distance piece between the two rubber blocks is felt to be clamped. Finally tighten the lock nut.

Rear End of Tie Rod:

Screw up the adjusting nuts 'X' Tg14A, finger tight and then tighten them an equal amount until the distance piece 'Y' is clamped which will pre-load the rubber blocks 'Z' an equal amount. Finally tighten the lock nuts.

7A. TO REMOVE, DISMANTLE & CLEAN THE SIDE CHANGE GEAR MECHANISM:

If for the reason explained in Paragraph 1, ("Service Faults"), Sub-paragraph (ii), it is necessary to dismantle the side change gear mechanism, proceed as follows:-

(i) Uncouple the change gear lever shaft 4, Fig. 15, from the selector lever shaft at the spherical joint by removing the four bolts; first marking the relationship of the flanges of the joint. Collect the spring (2).

(ii) With the main switch in the "off" position, remove the Bakelite cover from the reverse lamp switch and remove the three cables from the two terminals, taking note of the position and colour of the cables. (Two are connected to the terminal nearest the centre of the chassis).

(iii) Remove the two nuts and flat spring washers (14) securing the gate bracket to the frame and manoeuvre the change gear unit past the floor board and out of position, leaving the packing pieces 13, (usually four) in place on the frame. These packing pieces are .036" (0.91 m/m) thick and are for alignment of the change gear lever shaft (4) with the selector lever shaft (1). It is advisable to temporarily wire them to the frame in the position found to prevent alignment troubles from arising on assembly, because in certain cases, tapered packing pieces may have been fitted.

(iv) Remove the cover (10) from the change gear gate, and the pinch bolt (12) from the change gear lever (9), taking care not to lose the small spring link fitted beneath the nut and washer of the bolt. Remove the lever from its shaft.

(v) Remove the key (11), the ferrule (15), the washer (16), and the spring (17) from the shaft.

(vi) Remove the shaft complete with the rubber stop (20), and then the gate (8) from the bracket, secured by two bolts.

(vii) Next remove the ball bearing assembly (6) and the spring (18). Tap on the outer face of the washer (19), removing it together with the outer bearing race (5).

(viii) Thoroughly clean all dismantled parts.

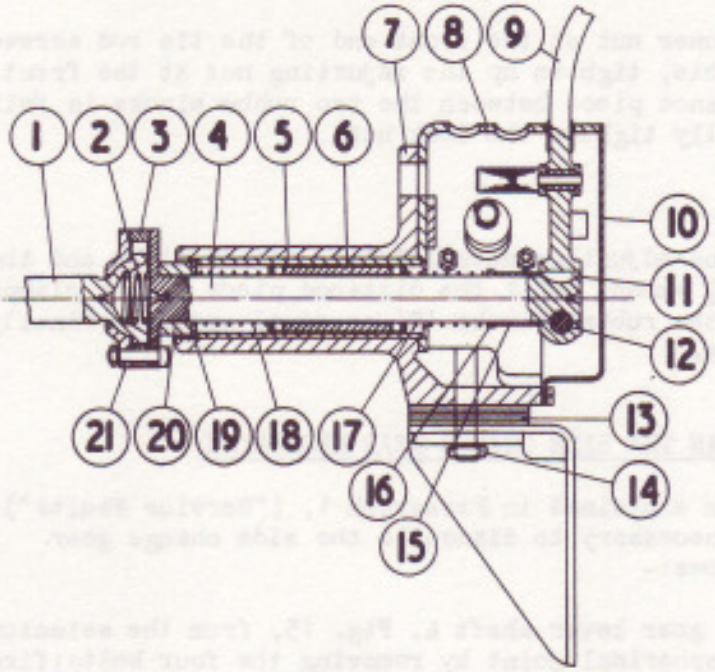

1. Selector lever shaft.
2. Spring-spherical joint.
3. Driven member.
4. Change gear shaft.
5. Outer race-bearing.
6. Bearing assembly.
7. Bracket.
8. Gate-change gear.
9. Change gear lever.
10. Cover-gate.
11. Key.
12. Pinch bolt.
13. Packing pieces.
14. Nut and spring washer.
15. Ferrule.
16. Washer.
17. Spring } Identical
18. Spring }
19. Washer.
20. Rubber stop.
21. Spherical bearing.

FIG. 15. SECTION - SIDE CHANGE GEAR MECHANISM.

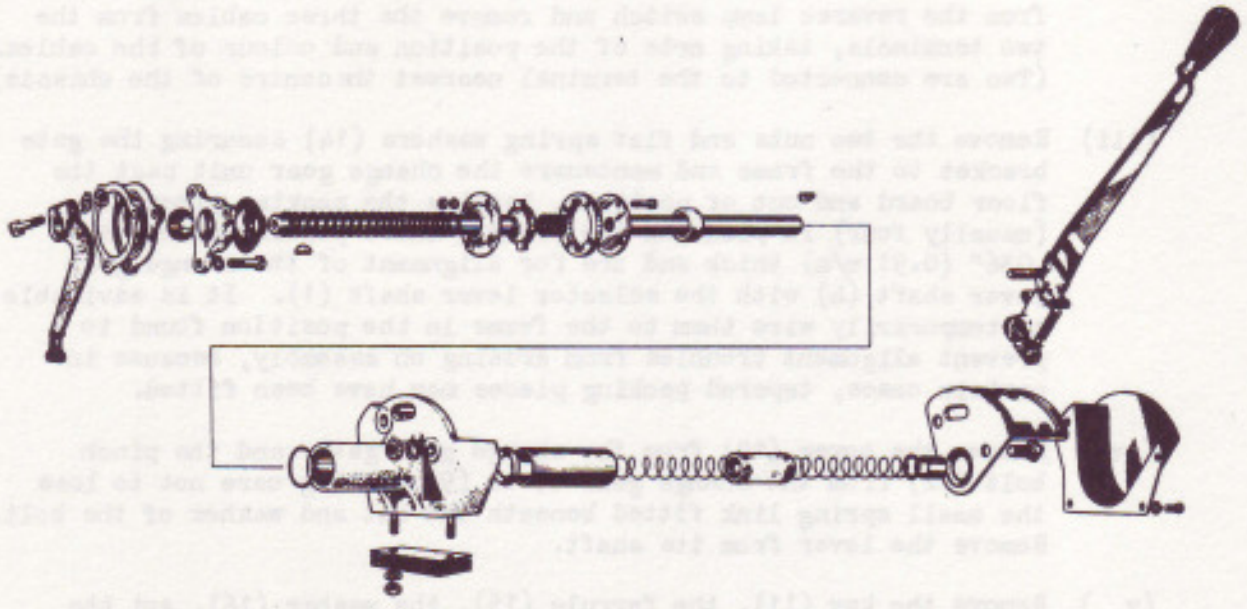

FIG. 15A. EXPLODED VIEW - SIDE CHANGE GEAR MECHANISM.

NOTE: The rubber stop (20) acts as a cushion preventing the change gear lever from contacting the right-hand side of the gate when changing into 3rd and 4th speed gears.

(ix) Apply a fine film of grease to the two rows of balls of the bearing assembly and re-assemble the parts which is the reversal of the dismantling operations. The two springs (17 & 18) are identical with one another.

(x) Check the position of the gate as described in paragraph 7, sub-paragraph (b).

8. TO REMOVE THE SELECTOR SHAFTS:

It should seldom be necessary to remove the three selector shafts, but in the event of this being required, proceed as follows:-
NOTE: The selector shafts can be removed without removing the reverse motion shaft. Fig.8A, shows an exploded view of the internal selector mechanism.

(i) Remove the eccentric pivot pin 3, Fig.11, by first removing the retaining plate (1). Withdraw the eccentric pin with a pair of pliers. Remove the actuating lever (4).

(ii) Remove the eccentric pivot pin 3, Fig.9, and the actuating lever(5).

(iii) Remove the remaining eccentric pivot pin 7, Fig.9, and the bronze actuating lever (9) and the adjusting washer (8) if fitted.

(iv) Invert the gearbox, remove the bottom cover plate(which is spring loaded), then the three springs, and the three .500" dia.balls. Remove the cover from the rear of the gearbox.

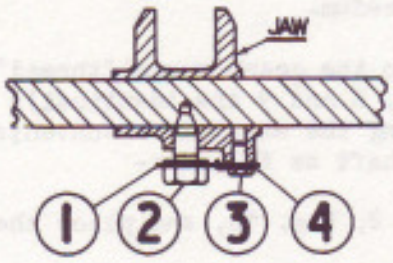

1. Locking plate
2. Locating screw.
3. Set - screw.
4. Lockwasher.

FIG. 16. SELECTOR JAW - METHOD OF LOCKING.

(v) The next operation is to unlock the jaws on the selector shafts - two on the reverse and one each on the 1st and 3rd shafts. Fig.16, shows the method of locking. To unlock, bend back the tab of the lockwasher (4), remove the setscrew (3), the locking plate (1) and the locating screw (2).

(vi) First unlock the forward jaw 4, Fig.17, on the reverse selector shaft and then the rear one and withdraw the shaft.

(vii) Unlock the jaw (9), on the 1st and 2nd speed selector shaft and withdraw the shaft. Carry out the same procedure for the 3rd and 4th speed shaft.

(viii) Place a piece of wire, suitably bent, into the outer rear bore of the gearbox which carries the rear end of the 3rd and 4th speed selector shaft and press the interlocking ball 7, Fig.17, into the centre bore 'A',and recover the ball.Place the wire in the bore nearest to the centre of the gearbox and carry out the same operation and recover the ball(6).These two balls have a diameter of .3125"

(ix) Thoroughly clean the gearbox and all dismantled parts.

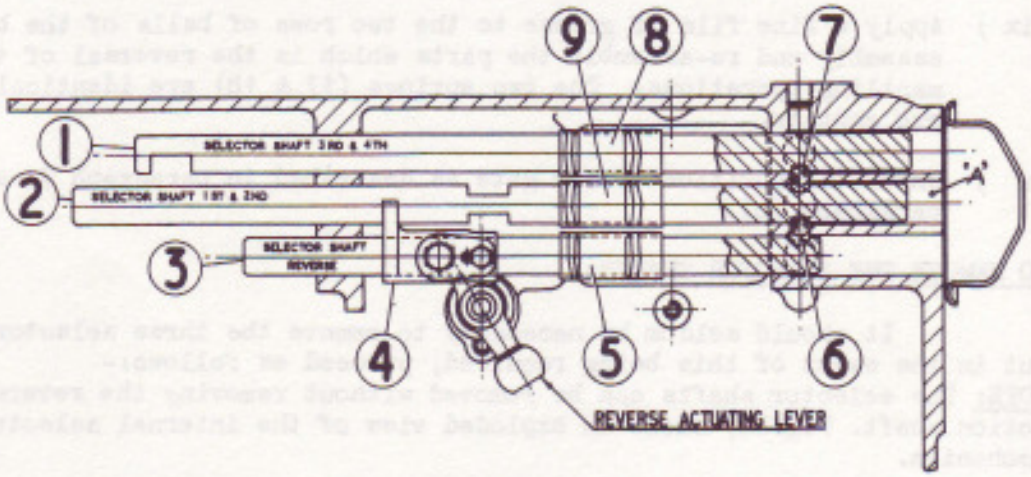

FIG. 17. SECTION - SELECTOR SHAFTS.

1. Selector shaft, 3rd & 4th speed.
2. Selector shaft, 1st & 2nd speed.
3. Selector shaft, reverse.
4. Fork & Jaw - Reverse operation.
5. Jaw - Reverse Selector shaft.
6. Ball, .3125" dia. (interlock)
7. Ball, .3125" dia. (interlock)
8. Jaw, 3rd & 4th speed selector shaft.
9. Jaw, 1st & 2nd speed selector shaft.

9. TO REFIT THE SELECTOR SHAFTS:

(i) Re-assemble in the following order.
NOTE: Prior to re-assembling the shafts, check each one in its respective bore in the gearbox for freedom.

(ii) Insert the reverse selector shaft into the gearbox and "thread" on the jaw, 5 Fig. 17, (the three jaws 5, 8 and 9 are identical), then the reverse actuating jaw (4). Holding the shaft in a convenient position, fasten the jaw (5) to the shaft as follows:-

a) Fully screw in the locating screw 2, Fig. 16, and place the locking plate (1) in position.

b) Place a new lockwasher (4) on to the locking plate. Fully screw in the setscrew (3) and bend up the tab of the lockwasher to lock.

c) Now fully insert the shaft into position and fasten the reverse actuating jaw (4), in precisely the same way. Then move the shaft into approximately its neutral position.

(iii) Place one of the two .3125" diameter balls (6 Fig.17) in the centre bore ('A'), and with a piece of wire, manoeuvre it until it engages with the spherical recess in and near the end of the reverse selector shaft.

(iv) Insert the 1st and 2nd speed selector shaft and fasten the jaw (9) as described above. Position the shaft so that the jaw is in line

with the selector jaw (5) on the reverse shaft. Place the remaining .3125" diameter ball (7) into the outer bore and manoeuvre it until it engages with the spherical recess towards the rear end of the selector shaft (2).

(v) Insert the 3rd and 4th speed selector shaft and fasten the remaining selector jaw (8), as described above, and position the shaft so that the jaw is in line with the selector jaws on the other two shafts.

(vi) Place the three .500" diameter balls and the three springs in position, refit the bottom cover plate and the rear end cover.

(vii) Place the adjusting washer 8, Fig. 9, in the gearbox (if previously fitted) followed by the bronze actuating lever (9), and engage the latter in the reverse actuating jaw. Fit the eccentric pivot pin (7), and rotate it until the bronze actuating lever has maximum engagement in the reverse actuating jaw as described in paragraph 6, Sub-paragraph (ii).